WELL SITE NO. 3

FOR

TARTESSO

LOCATED IN A PORTION OF SECTION 30, TOWNSHIP 2 NORTH, RANGE 4 WEST OF THE GILA AND SALT RIVER BASE AND MERIDIAN, MARICOPA COUNTY, ARIZONA.

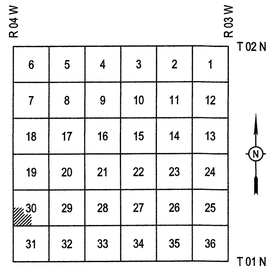

VICINITY MAP

NOT TO SCALE

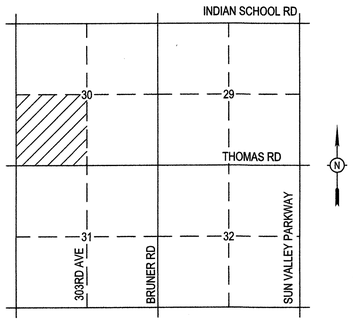

LOCATION MAP

NOT TO SCALE

FEMA FLOOD ZONE INFORMATION

COMMUNITY NUMBER	PANEL # PANEL DATE	SUFFIX	DATE OF FIRM (INDEX DATE)	FIRM ZONE	BASE FLOOD ELEV. (IN AO ZONE, USE DEPTH)
040039	2080 10/16/13	L	10/16/13	X	N/A
ALL FLOOD ZONES ARE SHOWN IN THIS PLAN SET.					

GENERAL PERMITTING NOTES

1. ALL CONSTRUCTION IN THE PUBLIC RIGHTS-OF-WAY OR IN EASEMENTS GRANTED FOR PUBLIC USE MUST CONFORM TO THE LATEST MARICOPA ASSOCIATION OF GOVERNMENTS (MAG) UNIFORM STANDARD SPECIFICATIONS AND UNIFORM STANDARD DETAILS FOR PUBLIC WORKS CONSTRUCTION AS AMENDED BY THE LATEST VERSION OF THE CITY OF BUCKEYE DESIGN STANDARDS. IF THERE IS A CONFLICT, THE CITY OF BUCKEYE STANDARDS WILL GOVERN.
2. THE APPROVAL OF THE PLANS IS VALID FOR ONE (1) YEAR FROM THE DATE OF THE CITY ENGINEER'S SIGNATURE. IF AN ENCROACHMENT PERMIT FOR THE CONSTRUCTION HAS NOT BEEN ISSUED WITHIN ONE (1) YEAR, THE PLANS MUST BE RESUBMITTED TO THE CITY FOR REAPPROVAL.
3. A CITY OF BUCKEYE INSPECTOR WILL INSPECT ALL WORKS WITHIN THE CITY OF BUCKEYE RIGHTS-OF-WAY AND IN EASEMENTS. NOTIFY THE CITY 24 HOURS PRIOR TO THE INSPECTION BY CALLING (623) 349-6248.
4. CITY PERMITS ARE REQUIRED FOR ALL WORK IN PUBLIC RIGHTS-OF-WAY AND EASEMENTS GRANTED FOR PUBLIC PURPOSES. A CITY PERMIT WILL BE ISSUED BY THE CITY ONLY AFTER ALL FEES HAVE BEEN PAID AND THE PERMIT HAS AN APPROVED MARICOPA COUNTY ENVIRONMENTAL SERVICES DUST PERMIT AND AN APPROVED STORM WATER POLLUTION PREVENTION PLAN ATTACHED. THE SWPPP SHALL COMPLY WITH ALL FEDERAL, STATE, AND LOCAL REQUIREMENTS.
5. COPIES OF ALL PERMITS AND MOST RECENT APPROVED PLANS MUST BE RETAINED ON-SITE AND BE AVAILABLE FOR INSPECTION AT ALL TIMES. FAILURE TO PRODUCE THE REQUIRED PERMITS AND PLANS WILL RESULT IN IMMEDIATE SUSPENSION OF ALL WORK UNTIL PROPER PERMIT DOCUMENTATION AND/OR PLANS ARE OBTAINED. ALL OF THESE REQUIREMENTS APPLY TO ONSITE GRADING AND IMPROVEMENT PLANS.

UTILITY COMPANIES — DATE SUBMITTED

ELECTRIC	ARZONA PUBLIC SERVICE	03/25/2016
TELEPHONE	CENTURYLINK	03/25/2016
CATV	COX COMMUNICATIONS	03/25/2016
WATER	CITY OF BUCKEYE	03/25/2016
SEWER	CITY OF BUCKEYE	03/25/2016
GAS	SOUTHWEST GAS	03/25/2016

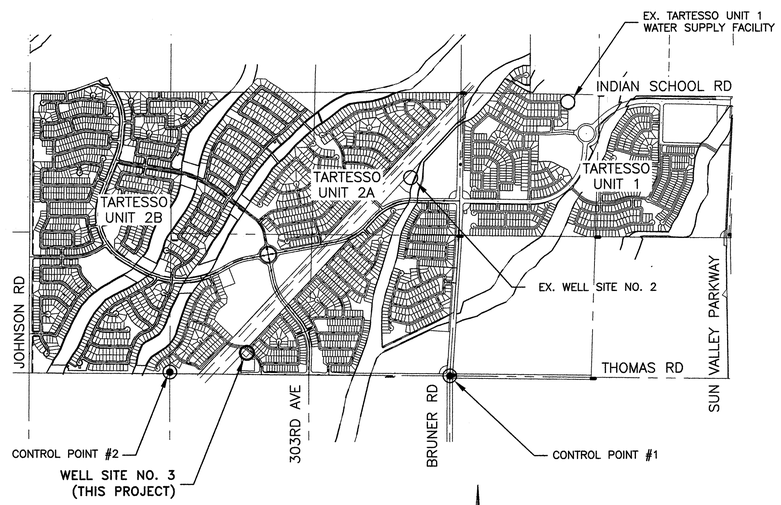

OVERALL DEVELOPMENT

NOT TO SCALE

DEVELOPER

TARTESSO 1261, LLC.
6730 N. SCOTTSDALE ROAD, SUITE 230
SCOTTSDALE, ARIZONA 85253
PHONE: (480) 607-5800
FAX: (480) 607-5801

ENGINEER

GHD
CONTACT: BILL ROBERTS
4747 N. 22ND ST. STE 200
PHOENIX, ARIZONA 85016
PHONE: (602) 216-7200
FAX: (602) 216-7201
EMAIL: PHXMAIL@GHD.COM

ELECTRICAL ENGINEER

DARCOR
CONTACT: JORGE GERARDO
7600 N. 16TH STREET
SUITE 212
PHOENIX, ARIZONA 85020
PHONE: (602) 795-2699
EMAIL: JGERARDO@DARCORINC.COM

SHEET INDEX

SHEET	DESCRIPTION
1	COVER SHEET
2	NOTES
3	CIVIL SITE PLAN
4	WELL PIPING PLAN & DETAILS
5	WELL DISCHARGE DETAILS
6	GATE DETAILS
7	ELECTRICAL COVER SHEET
8	ELECTRICAL SITE PLAN
9	SINGLE LINE DIAGRAM
10	CONTROL SCHEMATICS I
11	CONTROL SCHEMATICS II
12	ELECTRICAL DETAILS
13	ENLARGED ELECTRICAL BUILDING PLAN
14	WSF MODIFICATIONS
15	P & ID - I
16	P & ID - II

BASIS OF BEARING

BEARINGS ARE BASED UPON STATE PLANES COORDINATES GRID, NAD 83, ARIZONA CENTRAL ZONE.

BENCH MARK

MARICOPA COUNTY BRASS CAP IN A HANDHOLE AT VAN BUREN & SUN VALLEY PARKWAY: ELEV.=1100.36'

MARICOPA COUNTY HIGHWAY DEPT. BRASS CAP IN A HANDHOLE AT MCDOWELL & SUN VALLEY PARKWAY: ELEV.=1148.16'

APPROVAL

DISCLAIMER:

THE CITY APPROVES THESE PLANS FOR CONCEPT ONLY AND ACCEPTS NO LIABILITY FOR ERRORS AND OMMISIONS.

BY: _____
CITY OF BUCKEYE ENGINEER DATE

BY: _____
MARICOPA COUNTY ENVIRONMENTAL SERVICES DEPARTMENT DATE

IN ACCORDANCE WITH AAC R18-4-213, ALL MATERIALS ADDED AFTER JANUARY 1, 1993 WHICH MAY COME INTO CONTACT WITH DRINKING WATER SHALL CONFORM TO NATIONAL SANITATION FOUNDATION STANDARDS 60 AND 61.

AS-BUILT CERTIFICATION

I HEREBY CERTIFY THAT THE "AS - BUILT" INFORMATION SHOWN HEREON WAS OBTAINED UNDER MY DIRECT SUPERVISION AND IS CORRECT AND COMPLETE TO THE BEST OF MY KNOWLEDGE AND BELIEF.

_____
ARIZONA REGISTERED LAND SURVEYOR DATE

_____
ARIZONA REGISTRATION NUMBER

_____
TELEPHONE NUMBER

Contact Arizona 811 at least two full working days before you begin excavation
ARIZONA
Call 811 or click Arizona811.com

MANAGING ENGINEER / SURVEYOR: BILL ROBERTS	PROJECT COORDINATOR: BILL ROBERTS	DRAFTED: NMG	CHECKED: WDR
DESIGN LAYOUT: WDR		FIELD SURVEY: –	DRAFTED: – / CHECKED: –
DRAWING SCALES: AS NOTED			

PLAN TYPE: WELL SITE IMPROVEMENTS

ENGINEER INFORMATION:

4747 North 22nd Street, Suite 200
Phoenix, Arizona 85016 USA
T 1 602 216 7200 F 1 602 216 7201
E phxmail@ghd.com
W www.ghd.com

PROJECT: TARTESSO WELL SITE NO. 3 CITY OF BUCKEYE

COB PROJECT PLAN STICKER:

REVISIONS:
1
2
3

COB PERMITTING APPROVED SEAL	COB ENGINEERING APPROVED SEAL
AS-BUILT SEAL	DESIGN SEAL: Registered Professional Engineer (Civil) CERTIFICATE NO. 35921 WILLIAM D. ROBERTS Date Signed 03.30.16 ARIZONA U.S.A. Expires 3/31/16
ORIGINAL PLAN DATE: MAY 2008	LATEST REVISION DATE: MARCH 2016
PROJECT NUMBER: 84-11109067	SHEET NUMBER: 1 of 16

SUBMITTAL: 3RD SUBMITTAL **FINAL PLANS**

COB PLAN TRACKING #: ENG-14-00445
COB PERMIT #: ENG-14-00445

GENERAL WATER NOTES

1. A CITY OF BUCKEYE REPRESENTATIVE SHALL INSPECT & APPROVE ALL TRENCHING, BEDDING, PIPE INSTALLATION, BACKFILL & COMPACTION. A CITY REPRESENTATIVE SHALL ALSO INSPECT & APPROVE ALL PRESSURE TESTING, DISINFECTION & ALL OPERATIONAL SYSTEM TESTS. AFTER COMPLETION OF THE WATER SYSTEM, BUT BEFORE ACCEPTANCE BY THE CITY INTO THE WARRANTY PERIOD, ALL PUNCH LIST ITEMS MUST BE 100% COMPLETED, AS GENERATED BY THE CITY OF BUCKEYE.
2. ANY CITY REPRESENTATIVE OTHER THAN CITY EMPLOYEES SHALL BE NAMED AT THE PRE-CONSTRUCTION MEETING.
3. ALL APPLICABLE CONSTRUCTION SHALL BE APPROVED BY THE CITY'S BUILDING DEPARTMENT.
4. CONTRACTOR SHALL FURNISH & INSTALL ALL MATERIALS OF THE TYPE, CLASS & SIZE DESIGNATED FOR WATER SYSTEMS AS INDICATED ON THE CONSTRUCTION DRAWINGS, THE PROJECT SPECIFICATIONS, & THESE NOTES.
5. UNLESS OTHERWISE REQUIRED BY THESE NOTES, THE PROJECT SPECIFICATIONS, OR THE DRAWINGS, ALL CONSTRUCTION SHALL BE PERFORMED IN COMPLIANCE WITH M.A.G. STANDARD DETS. & SPECIFICATIONS (NEWEST EDITION) & SHALL MEET CURRENT CITY OF BUCKEYE STANDARDS & GUIDELINES. SHOULD ANY OF THESE GUIDELINES CONFLICT OR DISAGREE, THE MORE STRINGENT REQUIREMENT, AS DETERMINED BY THE ENGINEER, SHALL APPLY.
6. ALL CONSTRUCTION SHALL BE APPROVED BY THE ENGINEER OF RECORD. PRIOR TO THEIR COMPLETION OF THE APPROVAL OF CONSTRUCTION FORM.
7. ALL ELECTRICAL WORK SHALL BE APPROVED BY THE ELECTRICAL ENGINEER OF RECORD. PRIOR TO THE CITY BUILDING DEPARTMENT'S APPROVAL & ISSUANCE OF A GREEN TAG.
8. ANY CHANGES FROM THE APPROVED PLANS SHALL BE SUBMITTED TO THE CITY, ANY AFFECTED UTILITY, & THE ENGINEER FOR WRITTEN APPROVAL PRIOR TO INSTALLATION.
9. CONTRACTOR SHALL BE RESPONSIBLE FOR OBTAINING ALL REQUIRED PERMITS & INSPECTIONS FROM THE APPROPRIATE GOVERNMENTAL AGENCIES FOR ALL WORK IN PUBLIC RIGHT-OF-WAY (MARICOPA COUNTY HIGHWAY DEPT., CITY OF BUCKEYE INSPECTOR, ETC.). INSPECTIONS BY THE UTILITY COMPANY DO NOT RELIEVE THE CONTRACTOR OF THE RESPONSIBILITY TO OBTAIN REQUIRED INSPECTIONS FROM OTHER INTERESTED GOVERNMENTAL AGENCIES (BUILDING SAFETY, FIRE DISTRICT, ETC.).
10. THE CONTRACTOR SHALL SUBMIT COMPLETE INFORMATION, SHOWING ALL EQUIPMENT, MATERIALS, FITTINGS, GASKETS, MECHANICAL PIPE COUPLINGS, CONFIGURATION OF PIPE & PIPE LINING OR COATING TO THE ENGINEER AND CITY FOR APPROVAL PRIOR TO FURNISHING OF THESE ITEMS.
11. INSTALLATION & TESTING OF WATERLINE SHALL COMPLY WITH SECTION 610 OF M.A.G. SPECIFICATION.
12. IN ACCORDANCE WITH AAC R18-4-213, ALL MATERIALS ADDED AFTER JANUARY 1, 1993 WHICH MAY COME INTO CONTACT WITH DRINKING WATER SHALL CONFORM TO NATIONAL SANITATION FOUNDATION STANDARDS 60 & 61.
13. CONTRACTOR SHALL INSTALL 12-GUAGE SOLID CORE TRACER WIRE ON TOP OF ALL PROPOSED PIPE FOR WATERLINE LOCATION. WIRE SHALL BE STUBBED UP IN ALL VALVE BOXES.
14. THE CONTRACTOR SHALL PROVIDE & INSTALL BLACK POLYWRAP FOR ALL UNDERGROUND DUCTILE IRON PIPING FOR RAW WATER IN ACCORDANCE WITH MAG STD. SPECIFICATION 610.5.
15. WHEN CONNECTIONS ARE TO BE MADE TO ANY EXISTING PIPE OR APPURTENANCES, THE CONTRACTOR SHALL EXCAVATE FOR & EXPOSE THE EXISTING PIPE OR APPURTENANCES BEFORE LAYING ANY NEW PIPE. THE ENGINEER SHALL BE ALLOWED TO INSPECT THE EXISTING PIPE OR APPURTENANCES BEFORE ANY CONNECTION IS MADE. ANY APPURTENANCES OR ADJUSTMENTS IN SIZE, LINE, OR GRADE WHICH MAY BE NECESSARY TO ACCOMPLISH THE INTENT SHOWN ON THE DRAWINGS SHALL BE MADE AT NO ADDITIONAL COST.
16. AT THE CLOSE OF EACH WORK DAY, OR WHENEVER THE WORK CEASES FOR ANY REASON, THE END OF ANY OPEN PIPE SHALL BE SECURELY CLOSED WITH AN APPROVED FITTING, UNLESS OTHERWISE PERMITTED IN WRITING BY THE ENGINEER OR CITY REPRESENTATIVE.
17. UNLESS OTHERWISE APPROVED IN WRITING BY THE ENGINEER OR CITY REPRESENTATIVE, PIPE SHALL BE LAID UPGRADE FROM THE POINT OF CONNECTION ON THE EXISTING PIPELINE OR FROM A DESIGNATED STARTING POINT. PIPE SHALL BE INSTALLED WITH THE BELL END FORWARD OR UPGRADE, UNLESS APPROVED OTHERWISE. WHEN PIPE LAYING IS NOT IN PROGRESS, THE FORWARD END OF THE PIPE SHALL BE KEPT CLOSED WITH AN APPROVED TEMPORARY PLUG.
18. CONCRETE THRUST BLOCKING SHALL BE PROVIDED AT ALL FITTINGS PER MAG STD. DET. 380 & AT ALL VERTICAL BENDS PER MAG STD. DET. 381. EBAA-IRON MEGALUG RESTRAINTS OR FIELD LOK JOINTS MAY BE USED AS AN ALTERNATIVE ONLY ON DUCTILE IRON PIPE PER MAG STD. DET. 303.
19. THE CONTRACTOR SHALL FURNISH ALL EQUIPMENT & LABOR REQUIRED TO COMPLETE THE FLUSHING AS REQUIRED BY THESE NOTES. WATER WILL BE PROVIDED BY THE CONTRACTOR.
20. ALL NEW WATERLINE, APPURTENANCES, & WELL COMPONENTS SHALL BE DISINFECTED IN ACCORDANCE WITH MAG STD. SPECIFICATION 611 & ADEQ ENGINEERING BULLETIN NO. 8.
21. UPON FULL COMPLETION, THE CONTRACTOR SHALL PROVIDE START UP, TESTING, TRAINING, & CERTIFICATION SERVICES BY ALL APPLICABLE MANUFACTURER REPRESENTATIVES. A CITY REPRESENTATIVE SHALL BE ALLOWED TO VIDEO TAPE ALL TRAINING.
22. ALL COMPACTION MUST BE IN ACCORDANCE WITH THE PROJECT'S GEOTECHNICAL REPORT, MAG SPECIFICATIONS, & THE PROJECT SPECIFICATIONS.
23. SEE TYPICAL TRENCH DET. ON SHEET 5 FOR TRENCH EXCAVATION & BACK-FILLING REQUIREMENTS.
24. RAW WATER IS DEFINED ON THESE PLANS AS NON-DISINFECTED WELL WATER.
25. ALL REDUCER FITTINGS USED FOR WATERLINE CONSTRUCTION SHALL BE ECCENTRIC REDUCERS.

GENERAL CONSTRUCTION NOTES

1. THE ENGINEER WILL NOT BE RESPONSIBLE FOR CONSTRUCTION MEANS, METHODS, TECHNIQUES, SEQUENCES OR PROCEDURES OR FOR SAFETY PRECAUTIONS OR PROGRAMS UTILIZED IN CONNECTION WITH THE WORK, NOR WILL BE RESPONSIBLE FOR THE CONTRACTOR'S FAILURE TO CARRY OUT THE WORK IN ACCORDANCE WITH THE CONTRACT DOCUMENTS.
2. PRIOR TO BEGINNING CONSTRUCTION, THE CONTRACTOR SHALL VERIFY ALL DIMENSIONS & LOCATIONS OF ALL UTILITIES IN THE FIELD. ANY CONFLICTS OR DISCREPANCIES SHALL IMMEDIATELY BE BROUGHT TO THE ATTENTION OF THE ENGINEER IN WRITING. CONSTRUCTION SHALL NOT PROCEED UNTIL ALL CONFLICTS & DISCREPANCIES ARE RESOLVED.
3. THE ENGINEER & CITY REPRESENTATIVE MUST APPROVE, PRIOR TO CONSTRUCTION, ANY ALTERATION OR VARIANCE FROM THESE PLANS. ANY VARIATION FROM THESE PLANS SHALL BE PROPOSED ON CONSTRUCTION FIELD PRINTS & TRANSMITTED TO THE ENGINEER.
4. ANY INSPECTION OR OBSERVATION BY A CITY REPRESENTATIVE OR THE ENGINEER, SHALL NOT, IN ANY WAY, RELIEVE THE CONTRACTOR FROM ANY OBLIGATION TO PERFORM THE WORK IN STRICT COMPLIANCE WITH THE APPLICABLE CODES & AGENCY REQUIREMENTS.
5. CONTRACTOR TO LOCATE ALL EXISTING PROPERTY MONUMENTS PRIOR TO CONSTRUCTION. ANY MONUMENTS DISTURBED DURING THE CONSTRUCTION OF THIS PROJECT SHALL BE PLACED BY A REGISTERED LAND SURVEYOR AT CONTRACTOR'S EXPENSE.
6. THE CONTRACTOR SHALL PAY FOR ALL OPERATING FEES, INCLUDING ALL UTILITIES PRIOR TO CITY ACCEPTANCE OF THE PROJECT.
7. THE CONTRACTOR SHALL PROTECT & MAINTAIN ALL EXISTING UTILITIES ON THE SITE. ANY DAMAGE TO EXISTING UTILITIES, WHETHER SHOWN ON THE DRAWINGS OR NOT, SHALL BE REPAIRED/REPLACED AT THE CONTRACTOR'S EXPENSE. EXISTING SURFACE FEATURES & IMPROVEMENTS SHALL BE REPLACED IN KIND. UNLESS NOTED OTHERWISE ON THE PLANS OR PROJECT SPECIFICATIONS.
8. THE CONTRACTOR SHALL BE RESPONSIBLE FOR ALL STAKING AND AS-BUILT PREPARATION. ALL SURVEY WORK WILL BE PERFORMED UNDER THE SUPERVISION OF AN R.L.S. AS-BUILTS SHALL BE SEALED BY THE CONTRACTOR'S R.L.S.
9. TRAFFIC CONTROL SHALL BE MAINTAINED IN ACCORDANCE WITH M.A.G. SPECIFICATION 401 & THE MANUAL ON UNIFORM TRAFFIC CONTROL DEVICES.
10. DURING CONSTRUCTION & PRIOR TO FINAL APPROVAL AND ACCEPTANCE OF THE WORK, THE CONTRACTOR WILL BE REQUIRED TO CLEAN & REPAIR ADJACENT (OFF-PROJECT) ROADWAYS USED OR DAMAGED DURING COURSE OF CONSTRUCTION.

ENGINEERS GENERAL NOTES

1. THE CONTRACTOR IS RESPONSIBLE FOR PROVIDING ADEQUATE DRAINAGE & EROSION & SEDIMENT CONTROL ON THE CONSTRUCTION SITE PER FEDERAL, STATE & COUNTY REQUIREMENTS.
2. ALL SURROUNDING AREAS SHALL BE RESTORED TO THEIR ORIGINAL CONDITION AFTER CONSTRUCTION IS COMPLETED.
3. THE CONTRACTOR SHALL BE RESPONSIBLE FOR THE LOCATION, PROTECTION & REPAIR OF ALL UTILITIES, EXISTING & PROPOSED, DURING CONSTRUCTION. THE ENGINEER ASSUMES NO RESPONSIBILITY FOR THE LOCATION OF THE EXISTING UNDERGROUND UTILITIES. THE UTILITIES SHOWN ON PLANS HAVE BEEN PLOTTED FROM THE BEST AVAILABLE INFORMATION. TWO DAYS PRIOR TO EXCAVATION, THE CONTRACTOR SHALL CONTACT THE BLUE STAKE CENTER AT (602) 263-1100 FOR THE LOCATION & IDENTIFICATION OF UNDERGROUND UTILITIES.
4. IT IS THE CONTRACTOR'S RESPONSIBILITY TO DEMONSTRATE THE COMPLIANCE OF "EQUIVALENT" OR "EQUAL" ITEMS WITH THE CONSTRUCTION PLANS & SPECIFICATIONS TO THE ENGINEER AND CITY. EQUIVALENT ITEMS SHALL BE CONSIDERED BUT THEIR ACCEPTANCE IS NOT GUARANTEED.
5. CONTRACTOR SHALL BE SOLELY RESPONSIBLE FOR ALL TEMPORARY CONSTRUCTION SIGNAGE ONSITE REQUIRED BY THE CITY.

MATERIAL NOTES

1. ALL ABOVE GROUND WATERLINE SHALL BE DUCTILE IRON-CLASS 350.
2. ALL BELOW GROUND WATERLINE UP TO 12 INCHES IN DIAMETER SHALL BE C900 PVC-CLASS 200, EXCEPT FITTINGS (SEE NOTE 4).
3. ALL ABOVE GROUND PIPING SHALL BE FLANGED JOINT.
4. ALL BELOW GROUND PIPE FITTINGS SHALL BE DUCTILE IRON-CLASS 350.
5. ALL PRESSURIZED JOINTS SHOWN SHALL BE RESTRAINED.

EARTHWORK NOTES

1. THE CONTRACTOR SHALL BE RESPONSIBLE FOR ACQUIRING A GRADING PERMIT FROM THE CITY & MEET THE DUST CONTROL REQUIREMENTS OF MARICOPA COUNTY.
2. THE CONTRACTOR SHALL PERFORM ALL EARTHWORK REQUIRED TO CONSTRUCT THE PROPOSED FACILITIES AS SHOWN ON PLANS
3. CONTRACTOR SHALL REMOVE ALL VEGETATION & DEBRIS WITHIN 2 (TWO) FEET OF ANY CONCRETE SLAB FOOTPRINT.
4. CONTRACTOR SHALL BE SOLELY RESPONSIBLE FOR THE REMOVAL OF ALL SPOILS FROM THE CONSTRUCTION SITE IN ACCORDANCE WILL ALL FEDERAL, STATE, COUNTY, & MUNICIPAL REQUIREMENTS.

SIGNAGE NOTES

1. THE CONTRACTOR SHALL SUPPLY & INSTALL INFORMATION & SAFETY SIGNS THROUGHOUT THE WELL SITE AS REQUIRED BY THE CITY.
2. INFORMATION SIGNS SHALL INCLUDE, BUT NOT BE LIMITED TO ADDRESS, WELL NUMBER, & EMERGENCY PHONE NUMBERS.
3. SAFETY SIGNS SHALL INCLUDE, BUT NOT BE LIMITED EQUIPMENT OPERATION WARNINGS.
4. ALL SIGNS SHALL BE MADE OF MATERIALS SUITABLE FOR OUTDOOR USE AS REQUIRED BY THE SIGNS PROPOSED LOCATION.
5. ALL SIGNS & SIGN LOCATIONS SHALL BE APPROVED BY THE CITY PRIOR TO INSTALLATION.

WARRANTY NOTES

1. THE CONTRACTOR SHALL GUARANTEE ALL WORK IN ACCORDANCE WITH MAG PART 100, GENERAL CONDITIONS, THE CONTRACT, & THE CONSTRUCTION PLANS & SPECIFICATIONS. SHOULD TWO OR MORE OF THESE GUIDELINES CONFLICT, THE MORE STRINGENT REQUIREMENT SHALL APPLY.
2. THE WARRANTY PERIOD WILL BEGIN AFTER A WRITTEN ACCEPTANCE HAS BEEN ISSUED BY THE CITY TO THE CONTRACTOR.

CITY WATER NOTES

1. BACKFILLING SHALL NOT BE STARTED UNTIL LINES HAVE BEEN INSPECTED & APPROVED BY THE CITY.
2. FIRE HYDRANTS SHALL BE WATEROUS "PACER", MUELLER OR CLOW BREAK-AWAY, DRY-BARREL DESIGN & SHALL BE FURNISHED BY THE CONTRACTOR. ALL FIRE HYDRANTS SHALL BE PAINTED NFPA YELLOW OR OTHER COLORS BASED ON STANDARD DET. 31414 AFTER INSTALLATION. EACH FIRE HYDRANT SHALL BE FURNISHED WITH A GATE VALVE & NATIONAL STANDARD THREADS. FIRE HYDRANTS SHALL BE INSTALLED SUCH THAT THE CENTERLINE OF THE MAIN PUMPER NOZZLE SHALL NOT BE LESS THAN 18" OF MORE THAN 24" ABOVE FINISHED GRADE OR ADJACENT TOP OF CURB.
3. ALL VALVES SHALL BE RESILIENT WEDGE GATE TYPE & OPEN TO THE LEFT.
4. ALL SERVICE LINES SHALL BE TYPE K COPPER PIPE FROM CITY MAIN TO METER (THROUGH 2" SIZE). SERVICE CONNECTIONS SHALL CONFORM TO THE CITY OF BUCKEYE STANDARD DET. 31330.
5. ALL TAPS SHALL USE A BRONZE SERVICE SADDLE. EIGHT (8) INCHES OR LESS SHALL BE SINGLE STRAP & TWELVE (12) INCHES OR GREATER SHALL BE DOUBLE STRAP. STAINLESS STEEL STRAP(S) SHALL BE USED FOR PVC PIPE; OR BRONZE STRAP(S) FOR DUCTILE IRON PIPE.
6. METER BOXES & LIDS SHALL BE SUPPLIED BY THE DEVELOPER & INSTALLED FACING THIS LOT. ADJUSTMENTS TO FINAL GRADE SHALL BY DEVELOPER OR ITS CONTRACTOR. POLYMER CONCRETE METER BOXES WITH CONCRETE LID SHALL BE USED FOR ALL INSTALLATIONS PER COB DET.S 31331 THROUGH 31336.
7. ALL WATER METERS SHALL BE PURCHASED & INSTALLED BY THE DEVELOPER OR CONTRACTOR. ALL METERS & BOXES SHALL BE IN ACCORDANCE WITH CITY STANDARDS & SHALL BE COMPATIBLE WITH AMR SYSTEM. 5/8" & 3/4" METERS ARE NOT PERMITTED.
8. ALL VALVE BOXES SHALL BE MAG STD. DET. 391-1 TYPE "C" & MANUFACTURED BY TYLER UNION, SIGMA HEAVY DUTY RATED, OR CITY APPROVED EQUAL. WHERE VALVE BOXES ARE LOCATED OUTSIDE THE STREET OR SIDEWALK THERE SHALL BE A CLASS 'B' CONCRETE RING 6" THICK, & 30" IN DIA. PLACED AROUND THE VALVE BOX & FLUSH WITH THE TOP OF THE VALVE BOX. THE VALVE BOX SHALL BE SET 0.1' HIGHER THAT THE SURROUNDING GRADE. THERE SHALL BE A #4 BAR CENTERED IN THE CONCRETE RING & CONTRACTOR SHALL INSTALL A BLUE FLEXIBLE UTILITY MARKER LABELED "WATER VALVE."
9. ALL WATERLINE COMPACTION SHALL BE TYPE 1 PER MAG SPEC. SECTION 601.
10. ALL WATERLINE FITTINGS SHALL BE DUCTILE IRON WITH MECHANICAL JOINTS.
11. ALL BACKFLOW PREVENTERS SHALL HAVE AWWA CERTIFICATION. PRIOR TO OCCUPANCY, CONTRACTOR OR OWNER SHALL PROVIDE TESTING BY A CERTIFIED TESTER FOR ALL BACKFLOW PREVENTERS. TESTING SHALL BE WITNESSED BY THE CITY INSPECTOR. A COPY OF THE TEST REPORTS SHALL BE PROVIDED TO THE CITY INSPECTOR.
12. WATERLINE TESTING SHALL BE IN CONFORMANCE WITH MAG STD. SPEC. 610.15. ONE HUNDRED (100%) RECENT OF ALL NEW WATERLINES & SERVICES SHALL BE PRESSURE TESTED. DISINFECTION SHALL BE IN ACCORDANCE WITH MAG STD. SPEC. 611.
13. REFER TO DET. NO. 31200 FOR UNAUTHORIZED WATER VALVE SHUTOFF REQUIREMENTS.
14. WATER JETTING PER MAG SPEC. 601.4 IS ALLOWED ONLY FOR WATERLINE TRENCH WATERLINE BACKFILL IN NEW, LOCAL, & COLLECTOR STREET ROADWAYS WITHIN NEW DEVELOPMENTS. BACKFILL MATERIAL LIFTS FOR WATER JETTING SHALL NOT EXCEED 4' (LOOSE) IN DEPTH. WATER CONSOLIDATION SHALL NOT BE ALLOWED FOR BACKFILL & COMPACTION OF WATERLINE TRENCHES IN OR ADJACENT TO EXISTING ROADWAYS OR NEW ARTERIAL STREET ROADWAYS. TRENCH FLOODING IS NOT ALLOWED.
15. SHUT-DOWNS & NIGHT TIE-INS SHALL BE APPROVED & SCHEDULED WITH THE CITY OF BUCKEYE WATER DEPARTMENT.
16. ALL DIP SHALL BE POLY-WRAPPED & CEMENT MORTAR LINED.
17. 1" WATER METER CURB STOPS TO BE SET 8" BELOW THE BOTTOM OF THE METER BOX LID. ALL WATER SERVICE SHALL BE 1" OR LARGER.
18. CONTRACTOR SHALL MARK ALL METER LOCATIONS WITH A 2"x4" METAL STUD MARKER, PAINTED BLUE, PLACED 3' BELOW GRADE & 2' ABOVE GRADE. ALL METER LOCATIONS SHALL ALSO BE REFERENCE MARKED WITH BLUE PAINT ON ADJACENT CONCRETE AS DIRECTED BY THE CITY INSPECTOR.

CITY WATER NOTES CONT.

19. TRACER WIRE SHALL BE USED ON ALL WATERLINE CONSTRUCTION. THE WIRE SHALL BE 10AWG (THHN) & ATTACHED DIRECTLY ON TOP OF THE WATER MAIN DURING CONSTRUCTION & BACKFILL. THE WIRE SHALL BE RUN WITH ALL WATER MAINS, LOOPED UP ALL CONNECTION STATION VALVE BOXES, & RUN TO ALL TERMINATION POINTS OF THE WATERLINE. THERE SHALL BE MINIMAL UNDERGROUND SPLICES. IF A SPLICE IS NECESSARY, THE CONNECTION SHALL BE MADE WITH A WATER TIGHT CONNECTOR (APPROVED BY THE CITY ENGINEER) AS TO PROTECT ALL UN-INSULATED WIRE. TRACER WIRE IS NOT REQUIRED ON COPPER SERVICE LINES.
20. NON-DETECTABLE PLASTIC WARNING TAPE SHALL BE PLACED ABOVE WATERLINES. THE TAPE SHALL BE 6" WIDE, BLUE, & HAVE A PERMANENT MARKING: "CAUTION BURIED WATER LINE BELOW," SPACED EVERY 36".
21. CONTRACTOR SHALL PROVIDE ADEQUATE CUT/ELEVATION CONSTRUCTION STAKING FOR ALL WATERLINE INSTALLATIONS, TO ALLOW FOR PROPER DEPTH INSTALLATION & INSPECTION. MINIMUM STAKING LOCATIONS INCLUDE ALL MECHANICAL FITTINGS & VALVES.
22 ALL PLANS SUBMITTED TO THE CITY FOR MATER MAIN INSTALLATION, SHALL INCLUDE THE TECHNICAL DATA FOR THE FOLLOWING ITEMS, FOR REVIEW & APPROVAL BY THE CITY ENGINEER, PRIOR TO CONSTRUCTION (SUBMITTAL REQUIREMENTS SHALL NOT BE LIMITED BY THE FOLLOWING):

22.1 PIPE MATERIAL INCLUDING ALL FITTING, VALVES, GASKETS, TAPPING SLEEVES, COUPLINGS, CORPORATIONS STOPS, COPPER PIPE, METER STOPS, FIRE HYDRANTS, BLOW-OFFS, AIR RELEASE VALVES, COPPER FITTINGS, METER BOXES, VALVE BOXES, TRACER WIRE, ABC, CONCRETE, & ALL OTHER ITEMS AS REQUESTED BY THE CITY ENGINEER.

23. ALL WATER MAINS & LATERALS SHALL BE BEDDED WITH 4", SHADED & BACKFILLED TO 12" ABOVE THE TOP OF PIPE WITH APPROVED ABC MATERIAL.

CITY GRADING AND DRAINAGE NOTES

1. ALL DESIGN AND CONSTRUCTION MUST BE IN ACCORDANCE WITH THE UNIFORM STANDARD SPECIFICATIONS AND DETAILS FOR PUBLIC WORKS CONSTRUCTION PUBLISHED BY THE MARICOPA ASSOCIATION OF GOVERNMENTS (MAG) EXCEPT AS AMENDED BY THE CITY OF BUCKEYE STANDARD CONSTRUCTION DETAILS. ALL IMPROVEMENTS SHALL BE IN ACCORDANCE WITHIN THE DEVELOPMENT INCLUDING OFFSITE IMPROVEMENTS SHALL BE IN ACCORDANCE WITH THE LATEST CITY OF BUCKEYE ENGINEERING DESIGN STANDARDS.
2. NO GRADING SHALL BEGIN WITHOUT A PERMIT FROM THE CITY OF BUCKEYE.
3. OFFSITE CONSTRUCTION REQUIRES A SEPARATE PERMIT BY THE CITY OF BUCKEYE.
4. CONTRACTOR SHALL NOTIFY THE CITY OF BUCKEYE PUBLIC WORKS DEPARTMENT ASSIGNED INSPECTOR AT LEAST TWENTY-FOUR (24) HOURS IN ADVANCED OF ANY REQUIRED CONSTRUCTION INSPECTION.
5. CONTRACTOR MUST CALL THE ARIZONA BLUE STAKE CENTER (602) 263-1100, FOURTY-EIGHT (48) HOUR BEFORE DIGGING OR EXCAVATING FOR A LOCATION OF ALL UNDERGROUND UTILITIES.
6. IT IS THE RESPONSIBILITY OF THE DEVELOPER AND HIS/HER AGENT IN COORDINATING THE RELOCATION OF POWER POLES FROM THE APPLICABLE UTILITY COMPANY.
7. NO MINIMUM FINISHED FLOOR ELEVATION SHALL BE ALTERED, UNLESS APPROVED BY PUBLIC WORKS AND THE DEVELOPER'S CIVIL ENGINEER.
8. ALL STAKING INCLUDING FINISHED FLOOR ELEVATIONS IS THE SOLE RESPONSIBILITY OF THE CONTRACTOR'S LAND SURVEYOR. SUBMISSION OF CERTIFIED PAD ELEVATIONS IS REQUIRED PRIOR TO FINAL ACCEPTANCE.
9. CONTRACTOR SHALL PROVIDE GRADING FOR POSITIVE DRAINAGE IN ALL RETENTION BASINS AT ELEVATIONS AS ABUTTING PUBLIC RIGHT OF WAY.
10. DRYWELL INLET GRATE SHALL BE 0.30 FEET ABOVE FINISH GRADE AT BOTTOM ELEVATION OF THE RETENTION BASIN.
11. DRILLING LOGS FOR DRYWELLS AT 5.0 FOOT INTERVALS INCLUDING LITHOLOGY CHANGES WILL BE FURNISHED TO THE CITY OF BUCKEYE PUBLIC WORKS DEPARTMENT PRIOR TO FINAL ACCEPTANCE.
12. PERCOLATION TESTS WILL BE REQUIRED OF COMPLETED DRYWELLS PRIOR TO ACCEPTANCE. SHOULD EXISTING SOIL CONDITIONS BE ENCOUNTERED WHICH LACK SUFFICIENT PERCOLATION RATES, ADDITIONAL DRYWELLS OR AN ALTERNATE METHOD OF STORM WATER RUN-OFF DISPOSAL WILL BE REQUIRED. FINAL CERTIFIED PERCOLATION TEST RATES FROM ASTM D 3385 SHALL BE SUBMITTED AT THE TIME AS-BUILTS, WITH THE REQUIRED 50% REDUCTION FACTOR.
13. DRYWELL CONSTRUCTION SHALL BE DONE ONLY BY A CONTRACTOR LICENSED BY THE ARIZONA DEPARTMENT OF ENVIRONMENTAL QUALITY WITH THE APPROVED REGISTRATION FOR EACH DRYWELL.
14. THE APPROVED DRYWELL REGISTRATION SHALL BE SUBMITTED TO THE CITY BY THE CONTRACTOR AT THE TIME AS-BUILTS ARE SUBMITTED.
15. CONTRACTOR SHALL COMPLY WITH THE PROVISIONS FOR WORK ZONE SAFETY AND TRAFFIC CONTROL PROTECTION AS INDICATED IN PART IV OF THE MANUAL ON UNIFORM TRAFFIC CONTROL DEVICES (MUTCD 2003 EDITION) AND WHERE APPLICABLE ACROSS JURISDICTIONAL AUTHORITIES BUT WITHIN THE CITY OF BUCKEYE, MCDOT, AND ADOT'S TRAFFIC CONTROL MANUAL FOR HIGHWAY CONSTRUCTION AND MAINTENANCE (MOST CURRENT EDITION).
16. ALL RETENTION BASINS MUST DRAIN ANY STORM EVENT UP TO AND INCLUDING THE 100 YEAR 2 HOUR STORM WITHIN THIRTY-SIX (36) HOURS OF POST DEVELOPMENT CONSTRUCTION. OWNER(S) OF ANY BASIN FAILING TO MEET THIS REQUIREMENT MUST TAKE CORRECTIVE ACTION TO BRING THE BASIN INTO COMPLIANCE.
17. THE CONTRACTOR SHALL NOT DISTURB EXISTING SURVEY MONUMENTS OR BENCHMARKS NOTED ON THE PLANS. REMOVAL AND REPLACEMENT SHALL BE DONE BY AN ARIZONA REGISTERED LAND SURVEYOR ONLY.
18. THE CONTRACTOR SHALL HAVE SUFFICIENT MEANS TO PROVIDE DUST CONTROL. DUST SHALL BE CONTROLLED IN ACCORDANCE WITH THE MARICOPA COUNTY ENVIRONMENTAL SERVICES.
19. PERIMETER WALL FENCES ARE REQUIRED TO BE COMPACTED NO LESS THAN 90% BY THE CONTRACTOR.
20. ARRANGEMENTS FOR CONSTRUCTION WATER CAN BE MADE BY CALLING THE CITY OF BUCKEYE PUBLIC WORKS DEPARTMENT AT 623-349-6800.
21. THE CONTRACTOR SHALL PROVIDE ADEQUATE MEANS FOR THE ELIMINATION OF MUD AND DUST ACCUMULATION IN PUBLIC STREETS BY TRUCKS LEAVING THE SITE (TRACK OUT DEVICES). PUBLIC RIGHT OF WAYS SHALL BE KEPT CLEAN AND FREE OF DEBRIS FROM CONSTRUCTION SITES.
22. DISPOSAL OF EXCESS MATERIAL WITHIN THE CITY'S LIMITS IS PROHIBITED. A USE PERMIT IS REQUIRED FOR DISPOSAL AND/OR STOCKPILING MATERIALS WITHIN A RESIDENTIAL AREA.
23. APPROVED CONSTRUCTION PLANS SHALL BE KEPT ON THE JOBSITE AT ALL TIMES. DEVIATION FROM THE PLANS IS NOT ACCEPTABLE UNLESS AN APPROVED PLAN REVISION HAS BEEN GRANTED BY PUBLIC WORKS DEPARTMENT.

Contact Arizona 811 at least two full working days before you begin excavation
ARIZONA 811
Call 811 or click Arizona811.com

REVISIONS:

1

2

3

PLAN NAME

TARTESSO
WELL SITE NO. 3
CITY OF BUCKEYE

SHEET NAME

NOTES

ENGINEER INFORMATION
GHD
4747 North 22nd Street, Suite 200
Phoenix, Arizona 85016 USA
T 1 602 216 7200 F 1 602 216 7201
E phxmail@ghd.com
W www.ghd.com

COB PERMITTING APPROVED SEAL

COB ENGINEERING APPROVED SEAL

AS-BUILT SEAL

DESIGN SEAL

Registered Professional Engineer (Civil) CERTIFICATE NO. 35921 WILLIAM D. ROBERTS Date Signed 03-22-16 ARIZONA, U.S.A. Expires 3/31/16

SUBMITTAL 3RD SUBMITTAL FINAL PLANS

ORIGINAL PLAN DATE	LATEST REVISION DATE	COB PLAN TRACKING #
MAY 2008	MARCH 2016	ENG-14-0445
PROJECT NUMBER	SHEET NUMBER	COB PERMIT #
84-11109067	2 of 16	ENG-14-0445

G:\111\11109067\06-CADD\Drawings\Civil\11109067_G02.dwg stoft Mar 22, 2016 11:11:24am

KEYNOTES:

3. 12" CLASS 350 DIP WATERLINE PER NOTES AND SPECIFICATIONS. RESTRAIN ALL JOINTS AND FITTINGS.
6. 12" X 12" TEE.
8A. 12" GATE VALVE. INCLUDE BOX AND COVER PER MAG STD DET. 391-1 TYPE "A".
8B. 12" BLIND FLANGE.
19. EXISTING CMU WALL.
20. 20' SLIDING GATE, PER DETAIL SHEET 6. MODIFY EXISTING WALL AS REQUIRED FOR INSTALLATION.
22. GROUTED RIP-RAP. D50=6". INSTALL TO A DEPTH OF 12". 4" OF RIP-RAP SHALL BE EXPOSED AFTER GROUTING.
23. CONTRACTOR TO PLACE (2") 3/4" MINUS CLEAN STONE OVER 8" COMPACTED ABC WITHIN AREA SHOWN.
24. CONTRACTOR TO PLACE (1-1/2") 3/4" MINUS CLEAN STONE WITHIN LIMITS OF RETENTION BASIN.
25. DUAL CHAMBER DRYWELL PER DETAIL ON SHEET 4. SURVEY EXISTING GRADING AND SET INTERCEPTOR AND DRYWELL 3" ABOVE EXISTING GRADE.
26. REMOVE SEGMENT OF EXISTING WALL AND INSTALL DRAINAGE OPENINGS AS SHOWN. EACH OPENING SHALL CONSIST OF A BLOCK TURNED ON ITS SIDE. BOTH CELLS OF THE BLOCKS ADJACENT TO OPENINGS SHALL BE GROUTED SOLID WITH #5 VERT. REINFORCEMENT WITH MATCHING EPOXY DOWELS 4" INTO THE EXISTING FOOTING.
28. WELL PUMP DISCHARGE ASSEMBLY. SEE SHEET 4.
29. FUTURE GENERATOR (BY OTHERS)
30. POWER TRANSFORMER PER APS REQUIREMENTS. SEE ELECTRICAL PLANS FOR SPECIFICATIONS. CONTRACTOR SHALL COORDINATE WITH APS AS REQUIRED FOR INSTALLATION.
31. ELECTRICAL EQUIPMENT WITHIN PRECAST ENCLOSURE. SEE ELECTRICAL PLANS AND SPECIFICATIONS.
34. LOCATE, REMOVE EXISTING CAP, AND TIE INTO EXISTING RAW WATER TRANSMISSION LINE. ADJUST PROPOSED HORIZONTAL AND VERTICAL ALIGNMENTS AND PROVIDE ADDITIONAL FITTINGS AS REQUIRED FOR CONNECTION. POTHOLE FOR EX. PIPING PRIOR TO ORDERING PIPING AND EQUIPMENT
35. LOCATE AND TIE INTO EXISTING COPPER WATER SERVICE. PURCHASE METER AND INSTALLATION FROM CITY. INSTALL CONNECTION AND REDUCING COUPLINGS AS REQUIRED.
36. 3/4" TYPE 'K' SOFT COPPER TUBING FOR WATER SERVICE AND CONTROL VALVE OPERATIONS. ALL BURIED TUBING SHALL BE CONTINUOUS WITHOUT JOINTS OR FITTINGS EXCEPT TEES AND ABOVE GRADE IMPROVEMENTS.
37. CITY APPROVED 3/4" REDUCED PRESSURE BACKFLOW PREVENTION ASSEMBLY IN ENCLOSURE PER COB STANDARD DET. 31353.
38. 3/4" HOSE BIBB PER DETAIL ON SHEET 4.
40. BORE UNDER EXISTING WALL OR REPLACE ADDITIONAL SECTION OF WALL REPLACEMENT LIMITS AND DETAIL SHALL BE SUBMITTED TO THE ENGINEER FOR REVIEW AND APPROVAL.
41. REMOVE AND RESTORE EXISTING LANDSCAPE AND IRRIGATION. VERIFY EXISTING IRRIGATION SYSTEM IS FULLY OPERATIONAL PRIOR TO BEGINNING WORK AND AFTER COMPLETING INSTALLATION.
42. PROTECT EXISTING RAW WATER TRANSMISSION LINE IN PLACE. POTHOLE TO VERIFY LOCATION AND SIZE.
43. 4" SCH.40 DRAINAGE PIPE.
45. REMOVE AND DISPOSE OF EXISTING WELL PUMP, MOTOR, AND COLUMN ASSEMBLY.
46. SERVICE ENTRANCE PER ELECTRICAL PLANS AND SPECIFICATIONS. 6'x7'x6" REINFORCED CONCRETE SLAB . CONTRACTOR SHALL CONFIRM SLAB DIMENSIONS BASED ON ACTUAL EQUIPMENT SIZE. SEE ADDITIONAL SIZING REQUIREMENTS PER ELECTRICAL PLANS.
47. REMOVE AND DISPOSE OF EXISTING ELECTRICAL EQUIPMENT AND CONCRETE. COORDINATE WITH UTILITY AS REQUIRED.
48. INSTALL CATCH BASIN PER MAG STD. DETAIL 535 TYPE F.
49. INSTALL 12" X 16" REDUCER.

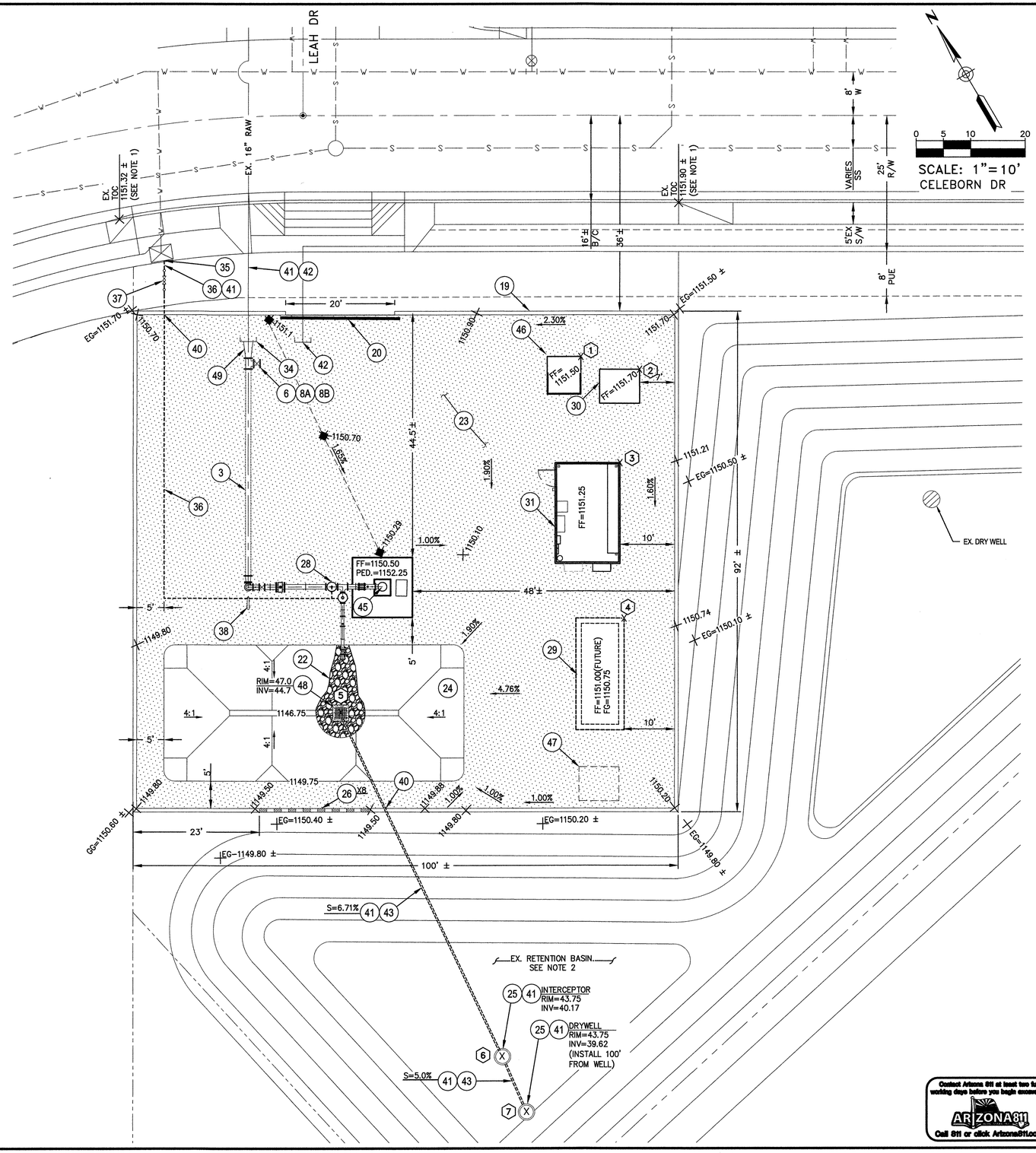

POINT TABLE

POINT	NORTHING	EASTING	DESCRIPTION
1	903264.31	458849.95	NE CORNER OF ELECTRICAL TRANSFORMER SLAB
2	903255.25	458856.25	NE CORNER OF SERVICE ENTRANCE SLAB
3	903245.16	458841.95	NE CORNER OF ELECTRICAL ENCLOSURE
4	903223.77	458823.06	N CORNER OF FUTURE STANDBY GENERATOR SLAB (BY OTHERS)
5	903246.55	458773.18	CENTER CATCH BASIN
6	903180.16	458751.87	CENTER OF DRYWELL INTERCEPTOR
7	903169.68	458748.18	CENTER OF DRYWELL

NOTES:
1. CONTRACTOR SHALL VERIFY EX. GRADES SHOWN AND NOTIFY ENGINEER OF ANY DIFFERENCE MEASURED.
2. COORDINATE ALL BASIN ACCESS THROUGH HOA AND SATISFY ANY HOA PERMIT AND/OR ACCESS REQUIREMENTS

CONTROL POINT #1 = S.E. CORNER SEC. 30, T2N, R4W (SEE DEVELOPMENT MAP)
FD. A 2 1/2" GLO BRASS CAP ON 2" OD PIPE UP 0.50'
N=902832.62
E=462629.61

CONTROL POINT #2 = S.W. CORNER OF SEC. 30 T2N, R4W (SEE DEVELOPMENT MAP)
FD. A 3 1/2" GLO BRASS CAP ON 3" OD PIPE UP 0.40'
N=902875.53
E=457374.53

REVISIONS:
1
2
3

PLAN NAME
TARTESSO
WELL SITE NO. 3
CITY OF BUCKEYE

SHEET NAME
CIVIL SITE PLAN

ENGINEER INFORMATION
GHD
4747 North 22nd Street, Suite 200
Phoenix, Arizona 85016 USA
T 1 602 216 7200 F 1 602 216 7201
E phxmail@ghd.com
W www.ghd.com

COB PERMITTING APPROVED SEAL
COB ENGINEERING APPROVED SEAL
AS-BUILT SEAL
DESIGN SEAL
Registered Professional Engineer (Civil) CERTIFICATE NO. 35921 WILLIAM D. ROBERTS Date Signed 03-31-15 ARIZONA U.S.A. Expires 3/31/16

SUBMITTAL: 3RD SUBMITTAL FINAL PLANS

ORIGINAL PLAN DATE	LATEST REVISION DATE
MAY 2008	MARCH 2016
PROJECT NUMBER	SHEET NUMBER
84-11109067	3 of 16

COB PLAN TRACKING # ENG-14-00445
COB PERMIT # ENG-14-00445

G:\111\11109067\06-CADD\Drawings\Civil\11109067_C01.dwg afoscato Mar Aug 21, 2015 8:50pm

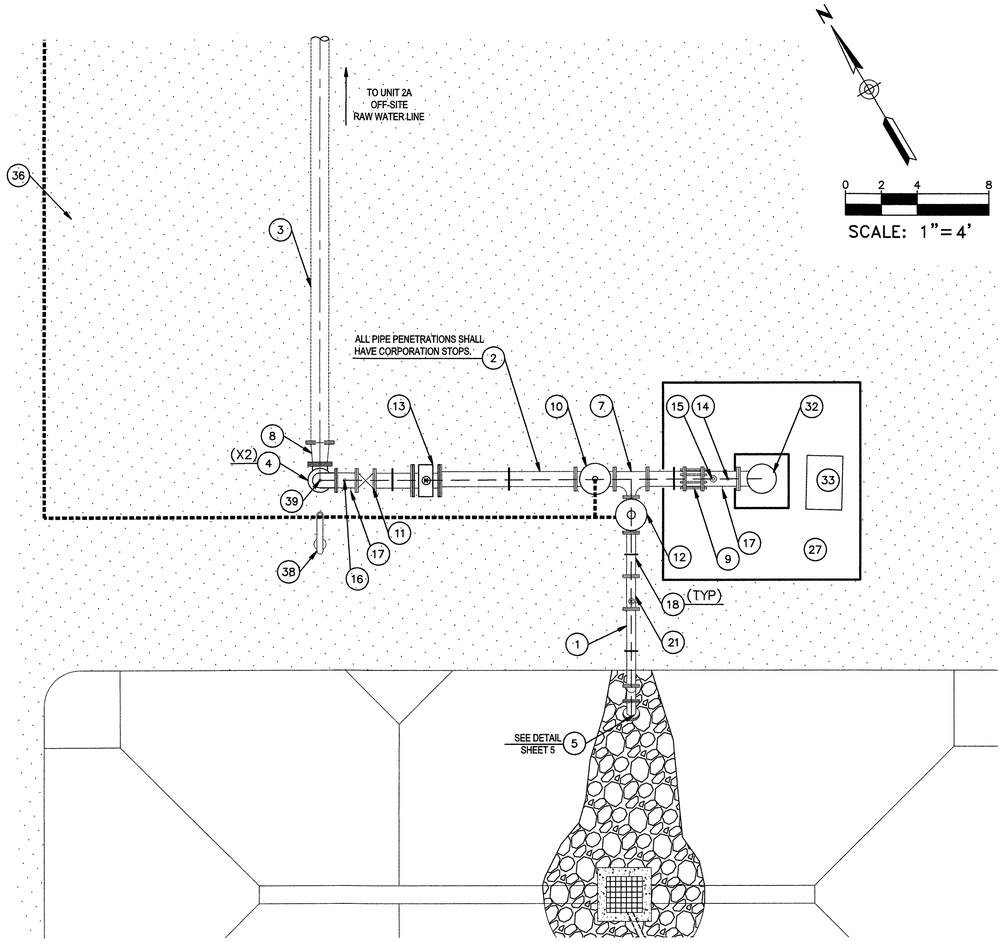

WELL PUMP DISCHARGE ASSEMBLY

1' = 4'

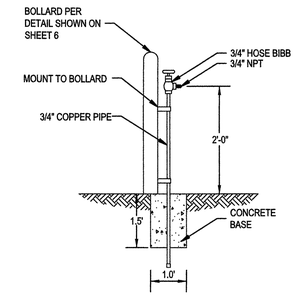

HOSE BIBB DETAIL

N.T.S.

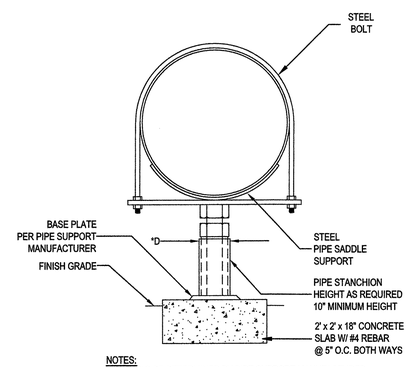

NOTES:
1. *D TO BE DETERMINED BY PIPE SUPPORT MANUFACTURER
2. PIPE SUPPORT SHALL BE MANUFACTURED BY APOLLO ENGINEERING COMPANY OR EQUIVALENT.

ADJUSTABLE PIPE SUPPORT

N.T.S.

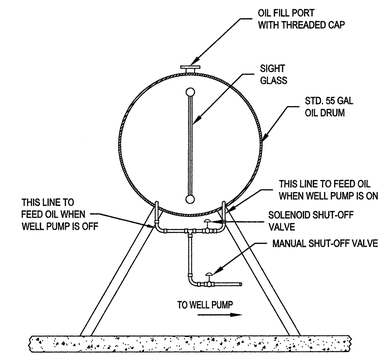

NOTES:
1. CONTRACTOR TO SUPPLY FIRST 55 GALLONS OF OIL USING PRODUCT APPROVED BY CITY.

OILER DRUM

N.T.S.

1. MODIFIED MANHOLE CONE.
2. 2 SACK SLURRY STABILIZED BACKFILL.
3. MINIMUM 30" Ø BOLTED CAST IRON RING AND GRATE.
4. MINIMUM 30" Ø BOLTED C.I. RING AND COVER WITH RAISED LETTERS "STORM WATER DRYWELL".
5. GRADED PARKWAY OR PAVEMENT.
6. COMPACTED ABC.
7. DEBRIS SCREEN - ANTI SIPHON (ROLLED 13 GAGE BY 0.265" MAXIMUM SWO FLATTENED EXPANDED STEEL. GALVANIZED OR FUSION BONDED EPOXY COATED).
8. PRECAST CONCRETE LINER, 4000 PSI - 48" ID, 54" OD.
9. MINIMUM 6' Ø DRILLED SHAFT.
10. SUPPORT BRACKET (TYP). GALVANIZED OR FUSION BONDED EPOXY COATED STEEL MIN. 3/8".
11. 8" Ø SCHEDULE 40 PVC OVERFLOW PIPE.
12. 6" - 12" Ø SCHEDULE 40 PVC INJECTION PIPE. NO PERFORATIONS BELOW SETTLING CHAMBER.
13. 3/8" TO 1-1/2" WASHED ROCK.
14. 4" THICK CONCRETE BASE.
15. INJECTION SCREEN - SCH. 40 PVC 0.120" SLOTTED WELL SCREEN WITH 32 SLOTS PER ROW/FT. 6'-12' Ø. OVERALL LENGTH = 96" WITH TRI-B COUPLER.
16. MINIMUM 4' Ø DRILLED SHAFT.
17. FABRIC SEAL - PLACE FILTER FABRIC UNDER GRATE UNTIL PAVING AND/OR LANDSCAPING IS COMPLETE (FILTER FABRIC TO BE UV RESISTANT).
18. 4" Ø SCHEDULE 40 CONNECTOR PIPE WITH FLOW REGULATOR.
19. HYDROPHOBIC PETROCHEMICAL SPONGE. MIN 128 oz CAPACITY.
20. STABILIZED BACKFILL - 2 SACK CONCRETE SLURRY
21. 8 PERFORATIONS PER LINEAR FOOT FOR BOTTOM 3 FEET OF CHAMBER.
22. 12" X 8" CONCRETE RING PER MAG STD DETAIL 422 (REQUIRED ONLY IN TRAFFIC LOADING APPLICATIONS).
23. 6 MIL PLASTIC LINER.
24. COUPLER (MDI CAULDER, TRI-A OR EQUAL).
25. OPTIONAL INLET PIPE - FREE BOARD DEPTH VARIES WITH PIPE INLET ELEVATION. INCREASE INTERCEPTOR/SETTLING CHAMBER AS NEEDED TO MAINTAIN ALL INLET PIPE ELEVATIONS ABOVE CONNECTOR PIPE OVERFLOW.

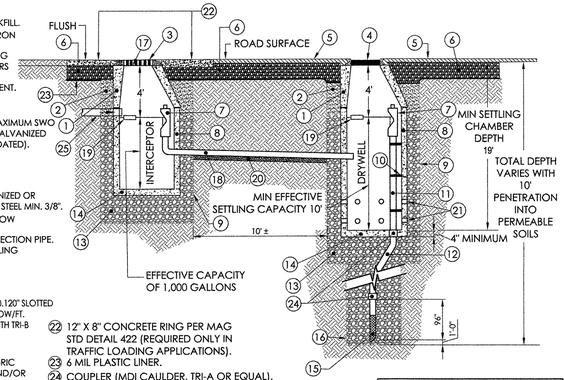

NOTE:
1. THIS DETAIL MODIFIES A STANDARD CITY DRAWING. THE PAVEMENT AND COMPACTED ABC SHOWN IS NOT APPLICABLE TO THIS PROJECT.

DRYWELL DETAIL

(C.O.B. DET. B-501)

N.T.S.

Contact Arizona 811 at least two full working days before you begin excavation
ARIZONA 811
Call 811 or click ArizonaBlue.com

KEYNOTES

1. 6" CLASS 350 DIP WATERLINE PER NOTES AND SPECIFICATIONS
2. 10" CLASS 350 DIP WATERLINE PER NOTES AND SPECIFICATIONS
3. 12" CLASS 350 DIP WATERLINE PER NOTES AND SPECIFICATIONS
4. 10" 90° (1/4) ELBOW BEND
5. 6" 45° (1/8) ELBOW BEND
7. 10" x 6" TEE
8. 12" x 10" REDUCER
9. 10" RESTRAINED RUBBER COUPLING PER SPECIFICATIONS.
10. 10" ELECTRICAL REMOTE CONTROL VALVE WITH CHECK VALVE OPTION. MODEL 136-03 BY CLA-VAL
11. 10" GATE VALVE WITH HAND WHEEL ASSEMBLY. CLASS 150-AWWA APPROVED ONLY.
12. 6" ELECTRICAL REMOTE DEEP WELL PUMP CONTROL VALVE. MODEL 61-29-KCX BY CLA-VAL.
13. 10" MAG FLOWMETER. SEE ELECTRICAL PLANS AND SPECIFICATIONS.
14. 3" WELL SERVICE AIR RELEASE VALVE, MODEL 102ST W/ 3" CONNECTION BY VALMATIC OR EQUIVALENT WITH CORP STOP & ISOLATION BALL VALVE.
15. 1/2" PRESSURE TAP WITH GAUGE AND CONNECTION TO CONTROL EQUIPMENT. SEE ELECTRICAL PLANS & SPECIFICATIONS.
16. 1/2" PRESSURE TAP FOR PRESSURE TRANSDUCER. SEE ELECTRICAL PLANS & SPECIFICATIONS.
17. 3/4" SAMPLE TAP W/ THREADLESS CORP. STOP AND TAPPING SADDLE.
18. ADJUSTABLE PIPE SUPPORT PER DETAIL THIS SHEET.
21. 6 " PROPELLER FLOWMETER. SEE ELECTRICAL PLANS AND SPECIFICATIONS
27. WELL SLAB. SEE DETAIL SHEET 5.
32. GOULDS VERTICAL TURBINE PUMP MODEL 13 CHC (8 STAGE), 250 HP. RATED 1300 GPM @ 590 FT. TDH OR EQUIVALENT.
33. 55 GALLON OILER ASSEMBLY, SEE DETAIL THIS SHEET.
36. 3/4" TYPE 'K' SOFT COPPER TUBING WITH REQUIRED FITTINGS FOR WATER SERVICE AND CONTROL VALVE OPERATIONS.
38. 3/4" HOSE BIBB PER DETAIL ON THIS SHEET.
39. 1" AIR RELEASE VALVE, MODEL 22.3 BY VALMATIC OR EQUIVALENT WITH CORP STOP & ISOLATION BALL VALVE.

REVISIONS:

1

2

3

PLAN NAME

TARTESSO
WELL SITE NO. 3
CITY OF BUCKEYE

SHEET NAME

WELL PIPING PLAN AND DETAILS

ENGINEER INFORMATION
GHD
4747 North 22nd Street, Suite 200
Phoenix, Arizona 85016 USA
T 1 602 216 7200 F 1 602 216 7201
E phxmail@ghd.com
W www.ghd.com

COB PERMITTING APPROVED SEAL

COB ENGINEERING APPROVED SEAL

SUBMITTAL: 3RD SUBMITTAL
FINAL PLANS

AS-BUILT SEAL

DESIGN SEAL
Registered Professional Engineer (Civil)
CERTIFICATE NO. 35921
WILLIAM D. ROBERTS
Date Signed 03-24-16
ARIZONA U.S.A.
Expires 3/31/16

ORIGINAL PLAN DATE	LATEST REVISION DATE
MAY 2008	MARCH 2016
PROJECT NUMBER	SHEET NUMBER
84-11109067	4 of 16

COB PLAN TRACKING # ENG-14-0445
COB PERMIT # ENG-14-0445

G:\111\11109067\06-CADD\Drawings\Civil\11109067_M01.dwg stoft Mar 24, 2016 7:15:48am

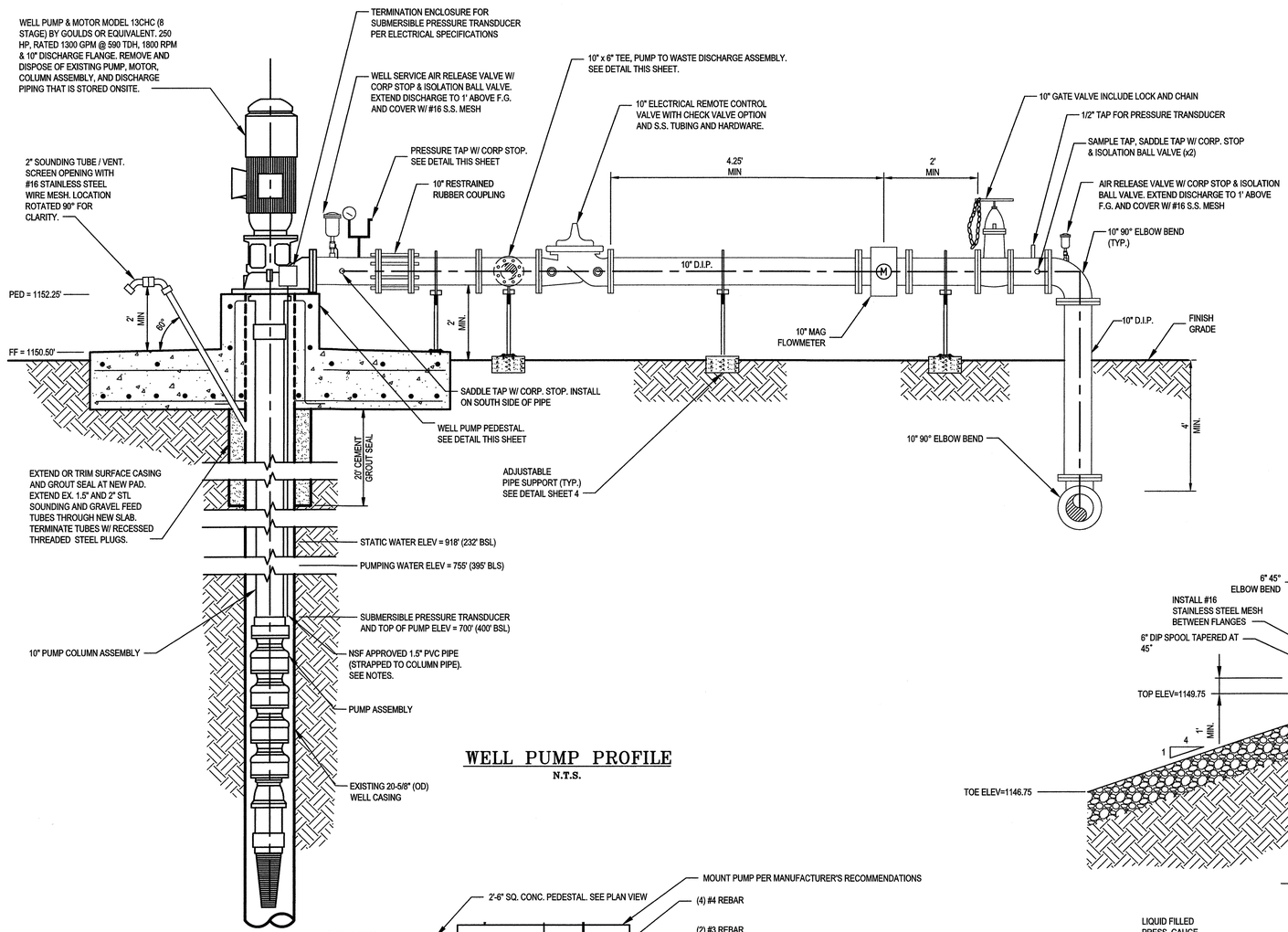

WELL PUMP PROFILE

N.T.S.

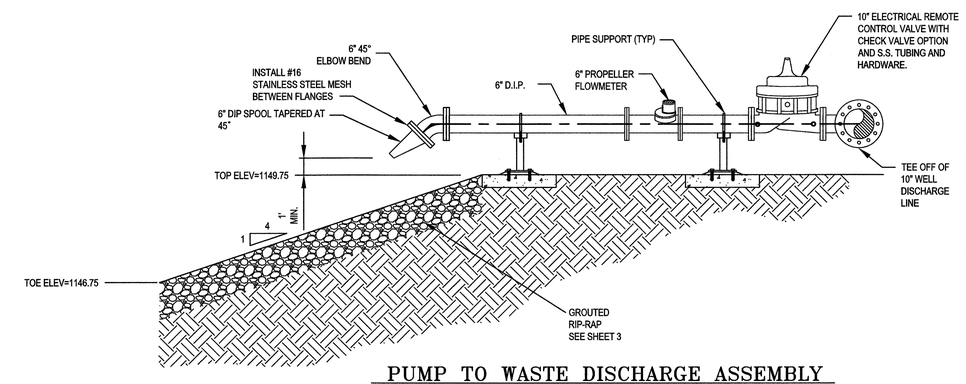

PUMP TO WASTE DISCHARGE ASSEMBLY

N.T.S.

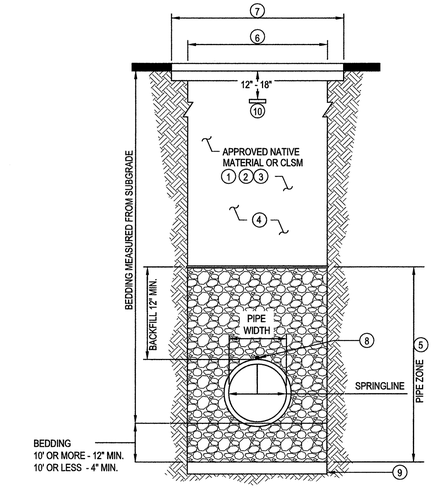

WATER TRENCH DETAIL

N.T.S.

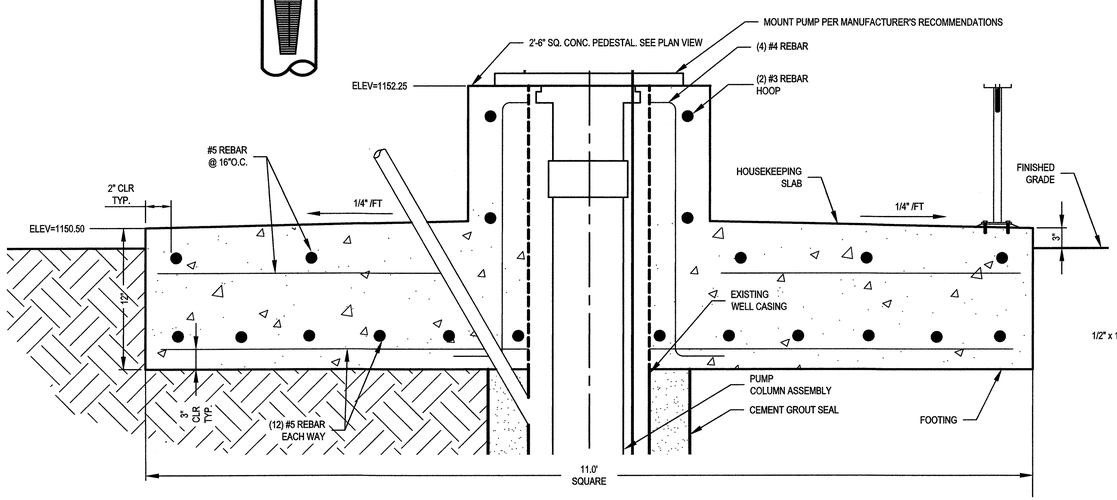

WELL PUMP PAD & PEDESTAL SECTION VIEW

N.T.S.

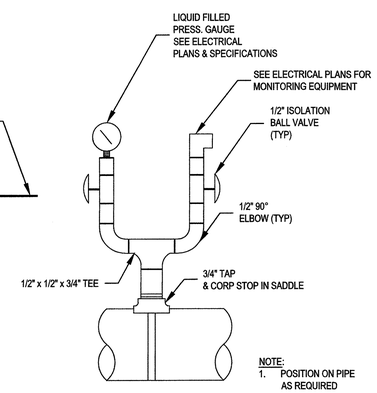

NOTE:
1. POSITION ON PIPE AS REQUIRED

PRESSURE TAP

N.T.S.

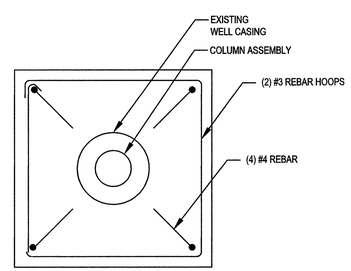

WELL PUMP PEDESTAL

N.T.S.

Contact Arizona 811 at least two full working days before you begin excavation
ARIZONA811
Call 811 or click Arizona811.com

WATER TRENCH NOTES:

1. All transverse trenching in existing streets shall be 100% ½ sack CLSM per MAG Spec 728. Backfill bedding base material to top of adjacent pavement.
2. All longitudinal trench cuts within 2' of existing pavement shall be backfilled 100% with ½ sack CLSM or ABC and compacted to 95%. Last two feet shall be compacted to 100%.
3. All trenching in unpaved streets can use screened native backfill. This also includes streets that will be completely reconstructed.
4. Trench compaction shall meet backfill Type 1, per MAG std. Spec Table 601-2.
5. Pipe zone material shall be approved ABC material placed per MAG Std. Spec 601.4 and compacted per Table 601-2.
6. Excavated trench width per MAG Spec Table 601-1.
7. Trenches in existing roads shall be per MAG Std. Dtl 200 "T-Top"
8. Tracer wire shall be a minimum 10 AWG and Blue in color for water lines. Tracer wire shall be taped to the top of the pipe using 10 Mil plastic pipe tape. Daylight wire at valve boxes. If there are no boxes at beginning and end points, terminate in city approved handhole.
9. Foundation stabilization (if necessary) shall be over excavation a min. of 6". An open graded material shall be placed back. Over excavation and open graded material shall be approved by the City Engineer or authorized representative. An approved geotextile fabric may be used between the bedding and foundation (based on soil conditions) if requested by the City Engineer or representative.
10. Non detectable plastic warning tape shall be placed 12" to 18" below finished sub grade. This shall be utility specific: (blue = water, purple = reclaimed water, etc.) and shall be permanently imprinted every 36" with, "CAUTION BURIED WATER LINE BELOW" or "CAUTION BURIED RECLAIMED WATER LINE BELOW".

WELL PIPING NOTES:

1. For further information refer to piping plan on Sheet 4.
2. All valves shall include a lockable chain assembly that restrains handwheels.
3. Install NSF approved 1.5" PVC pipe with submersible pressure transducer mounted to surface plate per manufacturer's specifications.
4. 1" PVC pipe shall be mounted to column pipe from surface plate to top of bowl assembly with stainless steel straps at 10 foot intervals.

CONCRETE NOTES:

1. f'c = 3,000 psi
2. fy = 60 ksi
3. Min. allowable bearing capacity = 1,500 psf

REVISIONS:

1
2
3

PLAN NAME

TARTESSO
WELL SITE NO. 3
CITY OF BUCKEYE

SHEET NAME

WELL DISCHARGE DETAILS

ENGINEER INFORMATION
GHD
4747 North 22nd Street, Suite 200
Phoenix, Arizona 85016 USA
T 1 602 216 7200 F 1 602 216 7201
E phxmail@ghd.com
W www.ghd.com

COB PERMITTING APPROVED SEAL	COB ENGINEERING APPROVED SEAL
AS-BUILT SEAL	DESIGN SEAL: Registered Professional Engineer (Civil), Certificate No. 35921, WILLIAM D. ROBERTS, Date Signed 03/31/16, ARIZONA, U.S.A., Expires 3/31/16
ORIGINAL PLAN DATE: MAY 2008	LATEST REVISION DATE: MARCH 2016
PROJECT NUMBER: 84-11109067	SHEET NUMBER: 5 of 16

SUBMITTAL: 3RD SUBMITTAL
FINAL PLANS

COB PLAN TRACKING # ENG-14-0445
COB PERMIT # ENG-14-0445

G:\111\11109067\06-CADD\Drawings\Civil\11109067_M02.dwg afoscato Mar 25, 2016 3:40:36pm

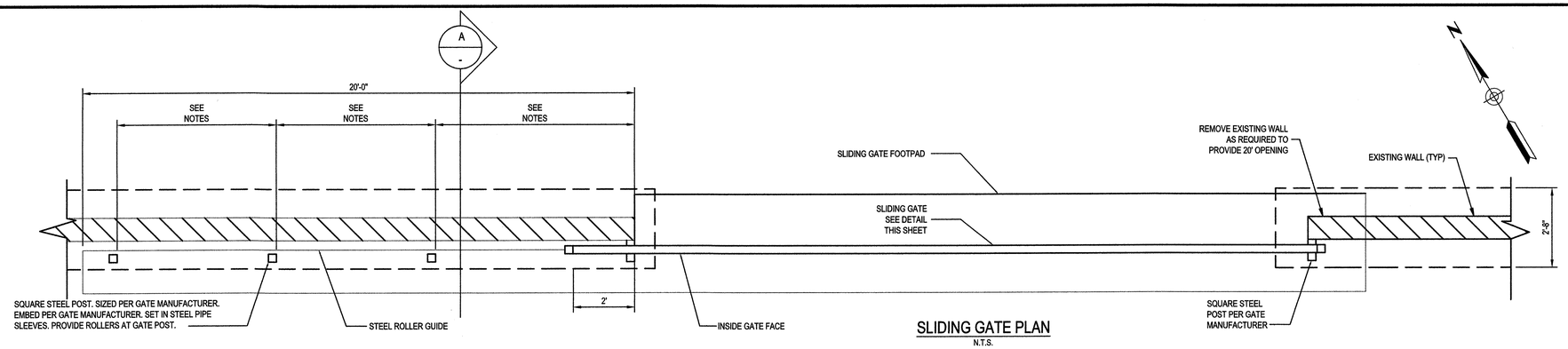

SLIDING GATE PLAN

N.T.S.

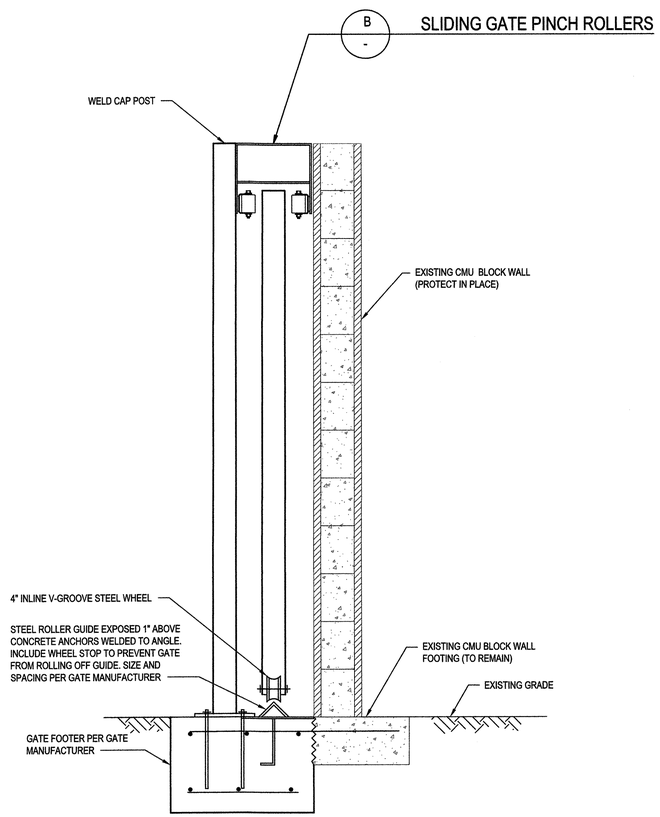

A - SLIDING GATE SECTIONAL DETAIL

N.T.S.

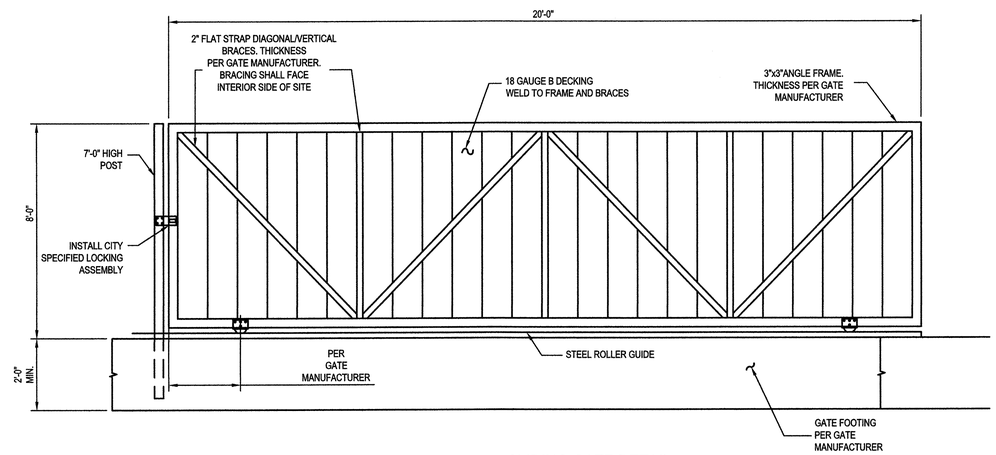

SLIDING GATE DETAIL

N.T.S.

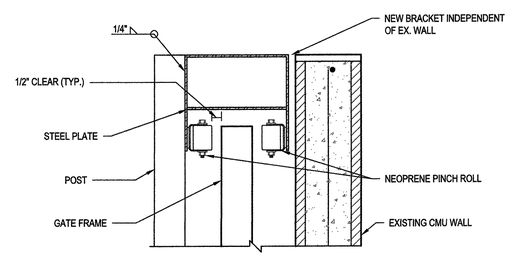

B - SLIDING GATE PINCH ROLLERS DETAIL

N.T.S.

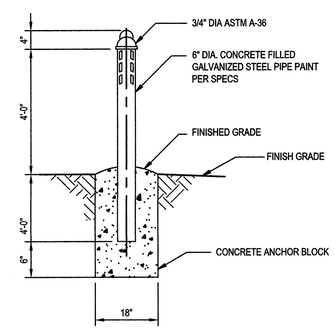

BOLLARD

N.T.S.

Contact Arizona 811 at least two full working days before you begin excavation
ARIZONA811
Call 811 or click Arizona811.com

STRUCTURAL NOTES:

1. USE GRADE 60 REBAR.
2. USE TYPE "N" CMU. f'm=1500 PSI.
3. USE TYPE "S" MORTAR. f'c=1800 PSI.
4. GROUT f'c=2000 PSI.
5. SOLID GROUT ENTIRE NEW PERIMETER WALL SECTIONS.
6. CONCRETE f'c=3000 PSI.
7. SPECIAL INSPECTION IS REQUIRED.
8. NEW WALL SECTIONS SHALL INCLUDE CONTROL JOINTS 24'-0" O.C. AND ON BOTH SIDES OF DRAINAGE OPENING.
9. GATE, GATE POSTS, AND GATE FOOTING SHALL BE DESIGNED BY THE MANUFACTURER TO BE FREE STANDING AND NOT APPLY FORCES OR LOADS ON THE EXISTING SITE WALL. PREPARE AND SUBMIT SHOP DRAWINGSSEALED BY A PE TO THE ENGINEER FOR APPROVAL. SUBMITTAL SHALL INCLUDE ANY NEW WALL SEGMENTS REQUIRED FOR GATE INSTALLATION. NEW WALL SECTIONS SHALL MATCH EXISTING WALL APPEARANCE OR CONTRACTOR SHALL COAT THE ENTIRE PERIMETER WALL.

GATE NOTES:

1. SIZE, NUMBER, AND SPACING OF POSTS TO BE VERIFIED BY GATE MANUFACTURER.
2. GATE FINISH SHALL BE APPROVED BY THE ENGINEER AND CITY BEFORE IT IS ORDERED.

REVISIONS:

1
2
3

PLAN NAME

TARTESSO
WELL SITE NO. 3
CITY OF BUCKEYE

SHEET NAME

WALL & GATE DETAILS

ENGINEER INFORMATION
GHD
4747 North 22nd Street, Suite 200
Phoenix, Arizona 85016 USA
T 1 602 216 7200 F 1 602 216 7201
E phxmail@ghd.com
W www.ghd.com

COB PERMITTING APPROVED SEAL

COB ENGINEERING APPROVED SEAL

SUBMITTAL: 3RD SUBMITTAL
FINAL PLANS

AS-BUILT SEAL

DESIGN SEAL
Registered Professional Engineer (Civil)
CERTIFICATE NO. 35921
WILLIAM D. ROBERTS
Date Signed 03/31/16
ARIZONA U.S.A.
Expires 3/31/16

ORIGINAL PLAN DATE MAY 2008	LATEST REVISION DATE MARCH 2016
PROJECT NUMBER 84-11109067	SHEET NUMBER 6 of 16

COB PLAN TRACKING # ENG-14-00445
COB PERMIT # ENG-14-00445

G:\111\11109067\06-CADD\Drawings\Civil\11109067_S01.dwg afoscato Mar 24, 2016 3:20:02pm

PLAN LEGEND

- EXPOSED CONDUIT
- UNDERGROUND CONDUIT DUCTBANK
- CONDUIT STUBUP
- CONDUIT TURNED DOWN
- UTILITY CONDUIT DUCTBANK
- CONDUIT RUN CONCEALED IN CEILING, FLOOR, OR IN WALLS
- EXISTING CONDUIT
- GROUNDING ELECTRODE CONDUCTOR
- OHE — EXISTING OVERHEAD ELECTRIC
- EXISTING UNDERGROUND ELECTRIC
- FENCE
- 120V, 20A DUPLEX RECEPTACLE
- $ — 120V, 20A SPDT OR SPST SWITCH
- TELEPHONE JACK
- CS — CONDUCTIVITY SWITCH
- FS — FLOAT SWITCH
- J — ABOVE GROUND JUNCTION BOX
- LE — LEVEL ELEMENT
- LT — LEVEL TRANSMITTER
- PC — PHOTOCELL
- PT — PRESSURE TRANSMITTER
- PS — PRESSURE SWITCH
- TS — TEMPERATURE SWITCH
- TE — TEMPERATURE ELEMENT
- T — THERMOSTAT
- NS — INTRUSION ALARM SWITCH
- MS — MOTION SENSOR
- JB — UNDERGROUND JUNCTION BOX
- F — FUSED DISCONNECT SWITCH
- S — SOLENOID VALVE (ENERGIZE TO CLOSE)
- S — SOLENOID VALVE (ENERGIZE TO OPEN)
- BUTTERFLY VALVE
- PLUG VALVE
- GATE VALVE
- WALL MOUNTED LIGHT
- CXXXX — CONDUIT DESIGNATION
- GROUND ROD AND WELL
- EXHAUST FAN
- RTU ANTENNA

VICINITY MAP

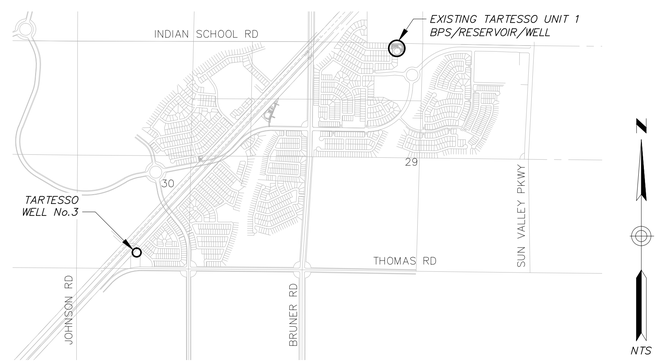

SINGLE LINE DIAGRAM AND SCHEMATIC LEGEND

- INTERNAL WIRING — FIELD WIRING
- TERMINAL BLOCK — TERMINAL BLOCK
- R — PILOT LIGHT (LETTER DENOTES COLOR)
- R, H — PUSH-TO-TEST PILOT LIGHT (LETTER DENOTES COLOR)
- CR — CONTROL RELAY
- PRESSURE SWITCH CLOSES ON RISING PRESSURE
- PRESSURE SWITCH OPENS ON RISING PRESSURE
- NORMALLY OPEN CONTACT TIME TO CLOSE (ON DELAY)
- NORMALLY CLOSED CONTACT TIME TO OPEN (ON DELAY)
- NORMALLY OPEN CONTACT TIME TO OPEN (OFF DELAY)
- NORMALLY CLOSED CONTACT TIME TO CLOSE (OFF DELAY)
- FLOW SWITCH CLOSES ON RISING FLOW
- FLOW SWITCH OPENS ON RISING FLOW
- FLOAT SWITCH OPENS ON RISING LEVEL
- FLOAT SWITCH CLOSES ON RISING LEVEL
- LIMIT SWITCH (N.C.)
- LIMIT SWITCH (N.O.)
- LIMIT SWITCH (N.C.)
- LIMIT SWITCH (N.O.)
- TEMPERATURE SWITCH OPENS ON RISING TEMPERATURE
- TEMPERATURE SWITCH CLOSES ON RISING TEMPERATURE
- ETM — ELAPSED TIME METER
- HORN
- BUZZER
- N — NEUTRAL BUS
- G — GROUND BUS
- DIODE
- DISCONNECT SWITCH (N.O.)
- DISCONNECT SWITCH (N.C.)
- TERMINAL BLOCK
- TERMINAL BLOCK IN FIELD DEVICE OR EXTERNAL EQUIPMENT
- MLO — MAIN LUG ONLY
- POWER DISTRIBUTION BLOCK
- CURRENT TRANSFORMER
- POWER TRANSFORMER
- CIRCUIT BREAKER WITH DOOR OPERATED HANDLE
- CIRCUIT BREAKER
- NORMALLY OPEN CONTACTS
- NORMALLY CLOSED CONTACTS
- CONTROL RELAY CONTACTS CONTROLLED BY PLC DISCRETE OUTPUT (N.O.)
- CONTROL RELAY CONTACTS CONTROLLED BY PLC DISCRETE OUTPUT (N.C.)
- 1 — MOTOR STARTER (NUMBER INDICATES NEMA RATING)
- NORMALLY OPEN MOMENTARY-CONTACT PUSHBUTTON
- NORMALLY CLOSED MOMENTARY-CONTACT PUSHBUTTON
- 3-POSITION SELECTOR SWITCH
- 2-POSITION SELECTOR SWITCH
- LO STOP — LOCKOUT STOP PUSHBUTTON
- PUSH-PULL EMERGENCY STOP PUSHBUTTON
- EARTH GROUND CONNECTION
- LEVEL PROBE
- WATER OR GAS BOND
- FUSE
- FUSED TERMINAL BLOCK
- OVERLOAD (ELECTRONIC TYPE)
- THERMAL OVERLOAD (BI-METALLIC)

GENERAL ELECTRICAL REQUIREMENTS

A. THE COMPLETED INSTALLATION SHALL CONFORM TO ALL APPLICABLE FEDERAL, STATE AND LOCAL CODE ORDINANCES AND REGULATIONS. CONTRACTOR SHALL OBTAIN NECESSARY PERMITS AND INSPECTIONS REQUIRED BY THE GOVERNING AUTHORITIES. ALL WORK SHALL BE DONE IN A NEAT, WORKMANLIKE, FINISHED AND SAFE MANNER, ACCORDING TO THE LATEST PUBLISHED N.E.C.A. STANDARDS OF INSTALLATION, UNDER COMPETENT SUPERVISION. INSTALL GROUNDING AS REQUIRED BY THE NATIONAL ELECTRIC CODE (2011).

B. VISIT THE SITE PRIOR TO BIDDING TO BECOME FAMILIAR WITH EXISTING CONDITIONS AND ALL OTHER FACTORS WHICH MAY AFFECT THE EXECUTION OF THIS WORK. INCLUDE ALL RELATED COSTS IN THE INITIAL BID PROPOSAL.

C. ALL MATERIALS SHALL BE NEW AND OF THE BEST QUALITY, MANUFACTURED IN ACCORDANCE WITH NEMA, ANSI, U.L. OR OTHER APPLICABLE STANDARDS. THE USE OF MANUFACTURER'S NAMES, MODELS AND NUMBERS IS INTENDED TO ESTABLISH STYLE, QUALITY, APPEARANCE USEFULNESS AND BID PRICE. PROPOSED SUBSTITUTIONS SHALL BE SUBMITTED IN WRITING AND REVIEWED BY THE ENGINEER BEFORE ORDERING.

D. PROTECT ALL ELECTRICAL MATERIAL AND EQUIPMENT INSTALLED UNDER THIS CONTRACT AGAINST DAMAGE BY OTHER TRADES, WEATHER CONDITIONS OR ANY OTHER CAUSES. EQUIPMENT FOUND DAMAGED OR IN OTHER THAN NEW CONDITION WILL BE REJECTED AS DEFECTIVE.

E. LEAVE THE SITE CLEAN, REMOVE ALL DEBRIS, EMPTY CARTONS, TOOLS, CONDUIT, WIRE SCRAPS AND ALL MISCELLANEOUS SPARE EQUIPMENT AND MATERIALS USED IN THE WORK DURING CONSTRUCTION. ALL COMPONENTS SHALL BE FREE OF DUST, GRIT AND FOREIGN MATERIALS, LEFT AS NEW BEFORE FINAL ACCEPTANCE OF WORK.

F. REFER TO OTHER PLANS FOR EXACT LOCATION OF EQUIPMENT AND ARCHITECTURAL FEATURES.

G. REFER TO SPECIFICATIONS FOR ADDITIONAL PROJECT REQUIREMENTS.

H. TYPICAL DETAILS APPLY IN ALL CASES WHETHER SPECIFICALLY REFERRED TO OR NOT.

I. THESE CONTRACT DOCUMENTS ARE SUBJECT TO THE INTERPRETATION BY THE ENGINEER. ALL QUESTIONS REGARDING THESE CONTRACT DOCUMENTS SHALL BE BROUGHT TO THE ENGINEER. ANYONE WHO TAKES UPON THEMSELF THE INTERPRETATION OF THESE CONTRACT DOCUMENTS OR MAKES REVISIONS TO THE SAME WITHOUT CONFERRING WITH THE DESIGN ENGINEER SHALL BE RESPONSIBLE FOR THE CONSEQUENCES THEREOF.

ABBREVIATIONS

2/C	TWO CONDUCTOR	LCC	LIGHTING CONTROL CABINET
2S	TWO SPEED	LFMC	LIQUIDTIGHT FLEXIBLE METAL CONDUIT
AFF	ABOVE FINISHED FLOOR	LIT	LEVEL INDICATING TRANSMITTER
AFG	ABOVE FINISHED GRADE	MBJ	MAIN BONDING JUMPER
AI	ANALOG INPUT	MCC	MOTOR CONTROL CENTER
AO	ANALOG OUTPUT	MFR	MANUFACTURER
APS	ARIZONA PUBLIC SERVICE	MLO	MAIN LUG ONLY
ATS	AUTOMATIC TRANSFER SWITCH	NPW	NON-POTABLE WATER
C	CONDUIT	PIT	PRESSURE INDICATING TRANSMITTER
CKT	CIRCUIT	PLC	PROGRAMMABLE LOGIC CONTROLLER
CPT	CONTROL POWER TRANSFORMER	PR	PAIR
Cu	COPPER	REQ'TS	REQUIREMENTS
DIST	DISTRIBUTION	RMC	RIGID METAL CONDUIT
DI	DISCRETE INPUT	RTU	REMOTE TERMINAL UNIT
DO	DISCRETE OUTPUT	RVNR	REDUCED VOLTAGE NON-REVERSING
EQMNT	EQUIPMENT	RW	RAW WATER
FIT	FLOW INDICATING TRANSMITTER	SAC	SECURITY AND ACCES CONTROL
FM	FLOWMETER	SES	SERVICE ENTRANCE SECTION
FVNR	FULL VOLTAGE NON-REVERSING	SPC	SPARE CONDUIT
FVR	FULL VOLTAGE REVERSING	SSS	SOLID-STATE SOFT STARTER
GEC	GROUNDING ELECTRODE CONDUCTOR	STT	SHIELDED TWISTED TRIAD
GFCI	GROUND FAULT CIRCUIT INTERRUPTER	SWBD	SWITCHBOARD
GFI	GROUND FAULT INDICATOR	TSP	TWISTED SHIELDED PAIR
GFP	GROUND FAULT PROTECTION	TST	TWISTED SHIELDED TRIAD
GND	GROUND	TVSS	TRANSIENT VOLTAGE SURGE SUPPRESSOR
GRS	GALVANIZED RIGID STEEL	TTB	TELEPHONE TERMINAL BOARD
INST	INSTRUMENT	VFD	VARIABLE FREQUENCY DRIVE
		WIU	WEATHERPROOF WHILE-IN-USE
		WP	WEATHERPROOF
		WSF	WATER SUPPLY FACILITY

APS CONTACT: MR. MIKE POLETE (623-932-6786)

LUMINAIRE SCHEDULE

SYMBOL	VOLTS	LAMP(S)	FIXTURE	DESCRIPTION	MANUFACTURER
SHADE CANOPY LIGHT	120V	(2) 32W P.S. FLUORESCENT		4' VAPORTIGHT (FULLY GASKETED) FLUORESCENT LUMINAIRE WITH STAINLESS STEEL LATCHES, SURFACE MOUNTED, ONE PIECE, IMPACT RESISTANT ACRYLIC DIFFUSER WITH SMOOTH SURFACE. UL LISTED FOR WET LOCATIONS. BALLAST SHALL BE OF THE PROGRAMMED START TYPE.	METALUX (VT2-2-32-DR-UNIV-ER82-WL-SSL) LITHONIA (DMW-2-32-ARDP-MVOLT-GEB10PS-STSL) COLUMBIA (LUN4-232-EP-U-SSL)
A	120V	(1) 100W-HPS		FULL CUTOFF WALL MOUNTED LUMINAIRE WITH A FULLY GASKETED TWO-PIECE DIE-CAST ALUMINUM HOUSING FINISHED WITH A BRONZE POLYESTER POWDER COAT. EPDM GASKETED SEALED IMPACT-RESISTANT GLASS LENS UL APPROVED FOR WET LOCATIONS.	GARDCO (101-FT-100MH-BRP) MCGRAW-EDISION (IST-100MP-BZ) NULITE (EJL-G-100MH-FT-BZ)
B	120	(1) 100W-MH		FULL CUTOFF WALL MOUNTED LUMINAIRE WITH A FULLY GASKETED DIE-CAST ALUMINUM HOUSING FINISHED WITH A BRONZE POLYESTER POWDER COAT. EPDM GASKETED SEALED IMPACT-RESISTANT GLASS LENS UL APPROVED FOR WET LOCATIONS.	GARDCO (EH14-1-Q-100MH-BRA) MCGRAW-EDISION (GSS-AM-100MP-5S-FG-BZ) HUBBELL (MSS-A-100-H-3-W-1)
C	120V	(2) 32W P.S. FLUORESCENT		2-TUBE, 1'x4' SURFACE MOUNTED INDUSTRIAL LUMINAIRE. UL LISTED FOR DAMP LOCATIONS. BALLAST SHALL BE OF THE PROGRAMMED START TYPE. (* INDICATES FIXTURE TO INCLUDE EMERGENCY BATTERY PACK)	DAY-BRITE (1FD232-PPS-UNV-EB10R) METALUX (DIF-232-UNV-GM-ER81) COLUMBIA (CSR4-232-ST-EP-U)

Contact Arizona 811 at least two full working days before you begin excavation
ARIZONA 811
Call 811 or click Arizona811.com

DARCOR ELECTRICAL CONSULTING ENGINEERS
7600 N. 16TH ST.
SUITE 212
PHOENIX, AZ 85020
Ph: (602) 795-2699
WWW.DARCORINC.COM

E1

REVISIONS:
1
2
3

PLAN NAME
TARTESSO
WELL SITE NO. 3
CITY OF BUCKEYE

SHEET NAME
ELECTRICAL COVER SHEET

ENGINEER INFORMATION
GHD
4747 North 22nd Street, Suite 200
Phoenix, Arizona 85016 USA
T 1 602 216 7200 F 1 602 216 7201
E phxmail@ghd.com
W www.ghd.com

COB PERMITTING APPROVED SEAL

COB ENGINEERING APPROVED SEAL

AS-BUILT SEAL

DESIGN SEAL
Registered Professional Engineer (Electrical)
CERTIFICATE NO. 53839
JORGE GERARDO
3/25/16
Date Signed
ARIZONA, U.S.A.
Expires 9/30/16

SUBMITTAL: 3RD SUBMITTAL
FINAL PLANS

ORIGINAL PLAN DATE	MAY 2008
LATEST REVISION DATE	MARCH 2016
PROJECT NUMBER	84-11109067
SHEET NUMBER	7 of 16

COB PLAN TRACKING # ENG-14-00445
COB PLAN TRACKING #
COB PERMIT # ENG-14-00445

Saved: March 25, 2016 File: 15040-WELL 3-E1.dwg Drafter: Dgriffin

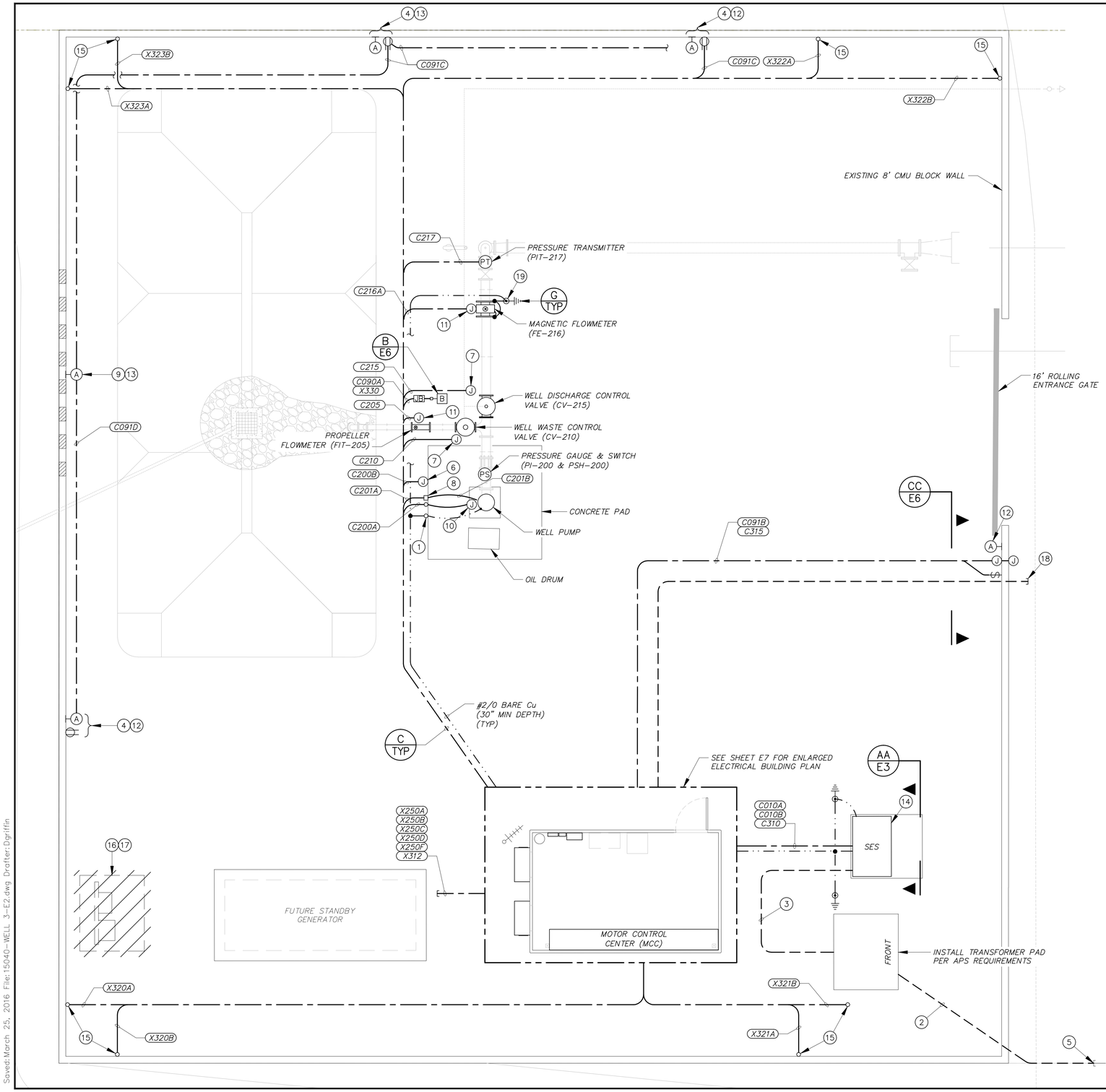

GENERAL NOTES

A. SEE SHEET E1 FOR LUMINAIRE SCHEDULE.

B. SEE SHEET E3 FOR CONDUIT & CONDUCTOR SCHEDULE AND PANEL SCHEDULE.

C. SEE SHEET E5 FOR ELECTRICAL DETAILS.

D. NO CONDUITS OR GROUND CONDUCTOR SHALL PENETRATE THE WELL PUMP PAD. INSTALL CONDUITS EXPOSED TO EQUIPMENT IN WELL PAD. SUPPORT CONDUITS PER NEC.

E. ALL EXPOSED CONDUIT SHALL BE SUPPORTED AS SPECIFIED OR PER NEC; WHICHEVER IS THE MORE STRINGENT REQUIREMENT.

KEY NOTES

1. EXTEND #2/0 BARE Cu GROUND CONDUCTOR AND BOND TO WELL PUMP CASING WITH UL LISTED LUG. FASTEN GROUND CONDUCTOR TO CONCRETE PAD WITH 1 HOLE STRAP.
2. INSTALL (1) 4" PRIMARY CONDUIT, TRENCH AND BACKFILL PER APS REQUIREMENTS.
3. INSTALL (2) 4" SECONDARY CONDUITS, TRENCH AND BACKFILL PER APS REQUIREMENTS. INSTALL CONDUCTORS SUCH THAT THERE WILL BE 20-FEET MINIMUM OF CONDUCTOR LENGTH (APPROX. 15-FEET OF CONDUIT).
4. STUBUP CONDUIT NEXT TO CMU BLOCK WALL AND INSTALL SURFACE MOUNTED 120V, 20A GFCI TYPE RECEPTACLE WITH WP WIU COVER AT +24". EXTEND 3/4" CONDUIT FROM RECEPTACLE TO SURFACE MOUNTED JUNCTION BOX NEAR TOP OF WALL FOR AREA LIGHT.
5. DIG DOWN AND LOCATE EXISTING 4" PRIMARY CONDUIT. EXTEND CONDUIT TO UTILITY TRANSFORMER PER APS REQUIREMENTS.
6. INSTALL 6"x6"x4" NEMA 4 PAINTED STEEL TYPE JUNCTION BOX 36" ABOVE FINISHED GRADE PER TYPICAL DETAIL. INSTALL 2-#14, #14 GND, 3/4"C TO PRESSURE SWITCH (PSH-200), MOTOR HIGH TEMPERATURE SWITCH (TSH-200) AND WELL PUMP OILER SOLENOID.
7. INSTALL 6"x6"x4" NEMA 4 PAINTED STEEL JUNCTION BOX PER TYPICAL DETAIL. EXTEND 2-#14, #14 GND, 3/4" LFMC TO SOLENOID VALVE AND BOTH LIMIT SWITCHES
8. SUBMERSIBLE LEVEL TRANSMITTER TERMINATION ENCLOSURE MOUNTED ON A 2½" GALVANIZED STEEL PIPE MOUNTING STAND. SEE SPECIFICATIONS FOR ADDITIONAL INFORMATION ON TERMINATION ENCLOSURE.
9. STUBUP CONDUIT NEXT TO CMU BLOCK WALL. EXTEND 3/4" CONDUIT TO SURFACE MOUNTED JUNCTION BOX NEAR TOP OF WALL FOR AREA LIGHT.
10. REPLACE MOTOR PECKERHEAD WITH AN OVERSIZED NEMA 3R JUNCTION BOX WITH POWER DISTRIBUTION BLOCKS FOR MOTOR LEAD TERMINATIONS.
11. STUBUP CONDUIT (C216A OR C205) TO A "T" CONDUIT BODY AT 18" AFG. EXTEND 1-FM MFR CABLE OR 1-TSP INSTRUMENT CABLE IN 3/4" LFMC FROM BOTH OUTLETS OF CONDUIT BODY TO FLOWMETER.
12. AREA LIGHT SHALL OPERATE FROM DUSK TO DAWN
13. AREA LIGHT SHALL OPERATE WHEN AN INTRUSION IS DETECTED
14. INSTALL INTRUSION ALARM SWITCHES ON EACH OUTER DOOR OF THE SES ENCLOSURE. INSTALL 2/C #16 PVC JACKETED CABLE BETWEEN SWITCHES AND CONNECT THEM IN SERIES SUCH THAT THE CIRCUIT WILL BE BROKEN WHEN ANY DOOR IS OPENED. DRILL AND TAP CABLE SUPPORTS AT 24-INCH INTERVALS ON INSIDE OF SES ENCLOSURE.
15. STUBUP AND CAP GRS CONDUIT +6" AFG FOR FUTURE SECURITY (MICROWAVE) EQUIPMENT.
16. COORDINATE WITH APS FOR THE DISCONTINUANCE OF POWER TO THE EXISTING ELECTRICAL EQUIPMENT.
17. DISCONNECT, REMOVE AND PROPERLY DISPOSE OF EXISTING ELECTRICAL EQUIPMENT, MOUNTING RACK, CONCRETE PAD, SERVICE ENTRANCE CONDUCTORS, RISERS AND UNDERGROUND CONDUIT.
18. STUBOUT (2) 2" CONDUITS FOR FUTURE TELEPHONE SERVICE. TRENCH AND BACKFILL PER TYPICAL TELEPHONE COMPANY REQUIREMENTS.
19. INSTALL 3/4" X 10' COPPER CLAD GROUND ROD AND WELL PER TYPICAL DETAIL. INSTALL #6 COPPER CONDUCTOR FROM FLOWTUBE GROUNDING RINGS TO GROUND ROD.

Contact Arizona 811 at least two full working days before you begin excavation
ARIZONA 811
Call 811 or click ArizonaBlue Stakes.com

DARCOR
ELECTRICAL CONSULTING ENGINEERS
7600 N. 16TH ST.
SUITE 212
PHOENIX, AZ 85020
Ph: (602) 795-2699
WWW.DARCORINC.COM

E2

REVISIONS:
1
2
3

PLAN NAME
TARTESSO
WELL SITE NO. 3
CITY OF BUCKEYE

SHEET NAME
ELECTRICAL SITE PLAN

ENGINEER INFORMATION
GHD
4747 North 22nd Street, Suite 200
Phoenix, Arizona 85016 USA
T 1 602 216 7200 F 1 602 216 7201
E phxmail@ghd.com
W www.ghd.com

COB PERMITTING APPROVED SEAL

COB ENGINEERING APPROVED SEAL

SUBMITTAL: 3RD SUBMITTAL
FINAL PLANS

AS-BUILT SEAL

DESIGN SEAL
Registered Professional Engineer (Electrical)
CERTIFICATE NO. 53839
JORGE GERARDO
3/25/16
Date Signed
ARIZONA, U.S.A.
Expires 9/30/16

COB PLAN TRACKING # ENG-14-00445

COB PERMIT # ENG-14-00445

ORIGINAL PLAN DATE	LATEST REVISION DATE
MAY 2008	MARCH 2016
PROJECT NUMBER	SHEET NUMBER
84-11109067	8 of 16

Saved: March 25, 2016 File: 15040-WELL 3-E2.dwg Drafter: Dgriffin

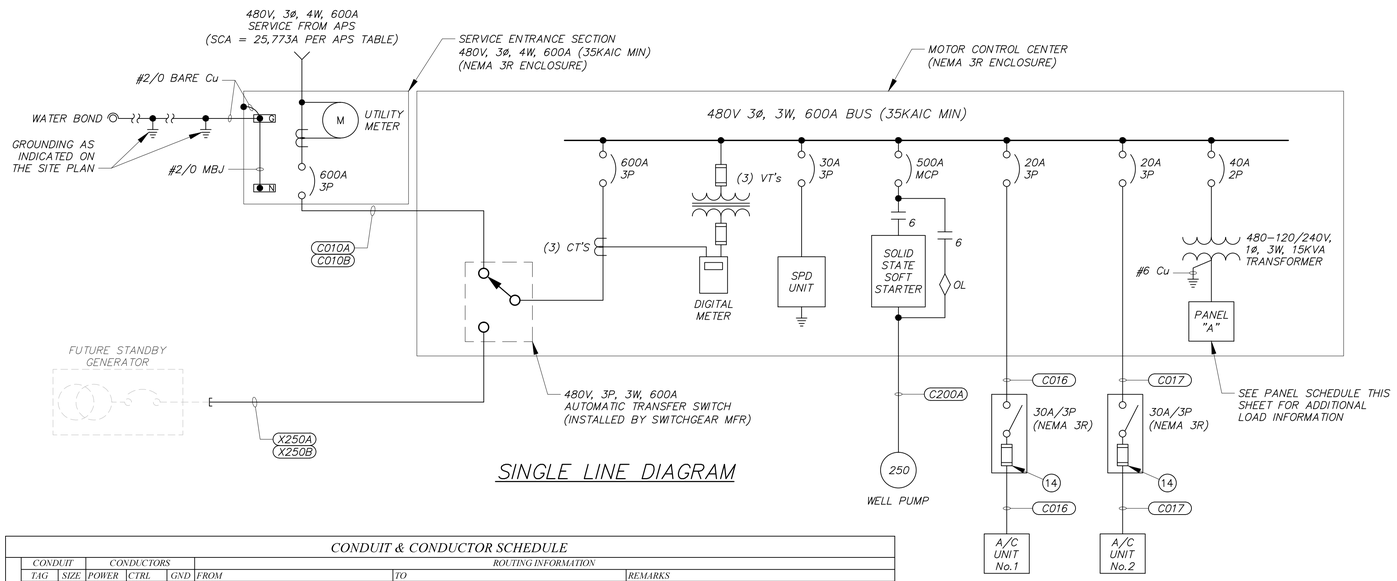

SINGLE LINE DIAGRAM

PANEL: A	VOLTAGE: 120/240V, 1ϕ	MAINS: 80A MCB	BUS AMPS: 100A
TYPE: BOLT-ON C/B'S	MOUNTING: IN SES		MIN AIC: 10,000

VA LOAD

	CIRCUIT DESCRIPTION	BKR	CKT	ϕA	ϕB	CKT	BKR	CIRCUIT DESCRIPTION	
	LIGHTING CONTROL CABINET	15	1	100		2	20	RTU/CONTROL SECTION	
				500					
X	AREA LIGHTS	15	3		540	4	20	BUILDING RECEPTS	
			5	3210		6	20	BUILDING INTERIOR LIGHTS	X
	FUTURE GENERATOR BLOCK HEATER	35	7	320	3210	8	15	POLE LIGHT/RECEPTACLE	X
			9	100	305	10	15	FUTURE SECURITY CABINET	
	FUTURE GENERATOR BATTERY CHARGER	20	11	0		12	15	SPARE	
X	BUILDING EXTERIOR LIGHTS	20			750		15	SPARE	
	SPACE			0			15	SPARE	
					0		15	SPARE	
				0			15	SPARE	
					0		15	SPARE	
	CONNECTED VA PER PHASE			4230	4805	NOTES:			
	CONNECTED AMPS PER PHASE			35.3	40.0	"X" DENOTES CONTINUOUS LIGHTING LOAD			
	+25% CONTINUOUS LIGHTING LOAD VA			80	211				
	DEMAND VA PER PHASE			4310	5016				
	TOTAL AMPS PER PHASE			35.9	41.8				

KEY NOTES

1. 6" CONCRETE PAD TO EXTEND 2" ON THREE SIDES AND 48" IN FRONT OF EQUIPMENT (SEE CIVIL PLANS FOR CONCRETE PAD REQ'TS)
2. FINISHED GRADE.
3. FASTEN SWITCHGEAR TO CONCRETE PAD WITH 3/8" GALVANIZED STEEL CONCRETE ANCHORS.
4. NOT USED.
5. LAMICOID NAMEPLATE TO READ "TARTESSO WELL No.3 RTU CABINET".
6. SOLID STATE SOFT STARTER KEYPAD.
7. 3-POSITION SELECTOR SWITCH.
8. 2-POSITION SELECTOR SWITCH.
9. ELAPSED TIME METER.
10. PILOT LIGHT (TYP 11).
11. RESET PUSHBUTTON.
12. EXHAUST FAN WITH GRILL.
13. INTAKE GRILL WITH SMALL PARTICLE REPLACEABLE FILTERS.
14. FUSE TYPE AND SIZE AS RECOMMENDED BY MECHANICAL EQUIPMENT MANUFACTURER.

CONDUIT & CONDUCTOR SCHEDULE

	CONDUIT TAG	CONDUIT SIZE	CONDUCTORS POWER	CONDUCTORS CTRL	CONDUCTORS GND	ROUTING INFORMATION FROM	TO	REMARKS
	C010A	3"	3-#350KCMIL		#1	SERVICE ENTRANCE SECTION	AUTOMATIC TRANSFER SWITCH IN MCC	
	C010B	3"	3-#350KCMIL		#1	SERVICE ENTRANCE SECTION	AUTOMATIC TRANSFER SWITCH IN MCC	
	C016	1"	2-#12		#12	MOTOR CONTROL CENTER (MCC)	AIR CONDITIONING UNIT No.1 (AC-1)	
	C017	1"	2-#12		#12	MOTOR CONTROL CENTER (MCC)	AIR CONDITIONING UNIT No.2 (AC-2)	
*	X020	3/4"	PULL STRING			PANEL "A" IN MCC	FUTURE RTU CABINET	SPARE CONDUIT FOR FUTURE 120VAC POWER
*	X021	3/4"	PULL STRING			PANEL "A" IN MCC	FUTURE SECURITY CABINET	SPARE CONDUIT FOR FUTURE 120VAC POWER
	C090	3/4"	3-#12		#12	LIGHTING CONTROL CABINET (LCC)	PHOTOCELL	
	C090A	3/4"	3-#12		#12	LIGHTING CONTROL CABINET (LCC)	POLE MOUNTED LIGHT AND RECEPTACLE	CKT.A-8
*	C091A	3/4"	8-#12		#12	PANEL "A" IN MCC	LIGHTING CONTROL CABINET (LCC)	CKT.A-1, A-3, A-8 & A-11
	C091B	3/4"	5-#12		#12	LIGHTING CONTROL CABINET (LCC)	LIGHTING SELECTOR SWITCH & AREA LIGHT	SWITCH & LIGHT AT ENTRANCE GATE
	C091C	3/4"	4-#12		#12	LCC / AREA LIGHT/RECEPTACLE	AREA LIGHT / RECEPTACLE	CKT A-3 (SWITCHED & UNSWITCHED LEGS)
	C091D	3/4"	3-#12		#12	AREA LIGHT /RECEPTACLE	AREA LIGHT / RECEPTACLE	CKT A-3 (SWITCHED & UNSWITCHED LEGS)
	C094A	3/4"		2-#14	#14	FIRE SUPPRESSION SYSTEM CONTROL PNL	A/C UNIT No.1	INTERLOCK
	C094B	3/4"		2-#14	#14	FIRE SUPPRESSION SYSTEM CONTROL PNL	A/C UNIT No.2	INTERLOCK
	C094C	3/4"		2-#14	#14	FIRE SUPPRESSION SYSTEM CONTROL PNL	FUTURE RTU CABINET	SPARE CONDUIT FOR FUTURE USE
*	X095A	2"	PULL STRING			RTU/CONTROL SECTION IN MCC	FUTURE RTU CABINET	SPARE CONDUIT FOR FUTURE ANALOG SIGNALS
*	X095B	2"	PULL STRING			RTU/CONTROL SECTION IN MCC	FUTURE RTU CABINET	SPARE CONDUIT FOR FUTURE DISCRETE SIGNALS
*	X095C	1"	PULL STRING			RTU/CONTROL SECTION IN MCC	FUTURE RTU CABINET	SPARE CONDUIT FOR FUTURE NETWORK CABLES
*	X096A	2"	PULL STRING			MOTOR CONTROL CENTER (MCC)	FUTURE RTU CABINET	SPARE CONDUIT FOR FUTURE USE
*	X096B	2"	PULL STRING			MOTOR CONTROL CENTER (MCC)	FUTURE RTU CABINET	SPARE CONDUIT FOR FUTURE USE
*	X097A	2"	PULL STRING			MOTOR CONTROL CENTER (MCC)	FUTURE SECURITY CABINET	SPARE CONDUIT FOR FUTURE USE
*	X097B	2"	PULL STRING			MOTOR CONTROL CENTER (MCC)	FUTURE SECURITY CABINET	SPARE CONDUIT FOR FUTURE USE
	C098A	2"	ANTENNA FEEDLINE			RTU/CONTROL SECTION IN MCC	U/G J-BOX NEAR ANTENNA MAST	
	X098B	2"	PULL STRING			FUTURE RTU CABINET	U/G J-BOX NEAR ANTENNA MAST	SPARE CONDUIT FOR FUTURE ANTENNA FEEDLINE
	C200A	4"	3-#500KCMIL		#2	WELL PUMP STARTER IN MCC	WELL PUMP	
	C200B	1"		6-#14	#14	WELL PUMP STARTER IN MCC	PULL BOX NEAR WELL PUMP	TSH-200, PSH-200 & OILJER SOLENOID
	C201A	1"	1-TSP INST CABLE			MCC CONTROL SECTION	SUBMERSIBLE LEVEL TRANSMITTER ENCLOSURE	4-20mA LEVEL SIGNAL
	C201B	1"	MFR CABLE			SUBM LEVEL TRANSMITTER ENCLOSURE	SUBMERSIBLE LEVEL SENSOR	
	C205	1"	2-TSP INST CABLES			MCC CONTROL SECTION	WASTE FLOWMETER (FE/FIT-205)	4-20mA FLOWRATE & PULSE SIGNALS
	C210	1"		5-#14	#14	WELL PUMP STARTER IN MCC	WASTE VALVE (CV-210) JUNCTION BOX	VALVE POSITION/CONTROL SIGNALS
	C215	1"		5-#14	#14	WELL PUMP STARTER IN MCC	DISTRIBUTION VALVE (CV-215) JUNCTION BOX	VALVE POSITION SIGNALS (2 SPARES)
	C216A	1"	MFR FM CABLE			DISCHARGE FM TRANSMITTER (FIT-216)	DISCHARGE FLOW TUBE (FE-216)	DO NOT SPLICE MFR CABLE
*	C216B	1"	2-TSP INST CABLES			MCC CONTROL SECTION	DISCHARGE FOR TRANSMITTER (FIT-216)	4-20mA FLOWRATE & PULSE SIGNALS
	C217	1"	1-TSP INST CABLE			MCC CONTROL SECTION	PRESSURE TRANSMITTER (PIT-217)	4-20mA DISCHARGE PRESSURE
	X250A	3"	PULL STRING			AUTOMATIC TRANSFER SWITCH IN MCC	FUTURE STANDBY GENERATOR	SPARE CONDUIT FOR FUTURE USE
	X250B	3"	PULL STRING			AUTOMATIC TRANSFER SWITCH IN MCC	FUTURE STANDBY GENERATOR	SPARE CONDUIT FOR FUTURE USE
	X250C	1"	PULL STRING			PANEL "A" IN MCC	FUTURE STANDBY GENERATOR	SPARE CONDUIT FOR FUTURE USE
	X250D	3/4"	PULL STRING			AUTOMATIC TRANSFER SWITCH IN MCC	FUTURE STANDBY GENERATOR	SPARE CONDUIT FOR FUTURE USE
*	X250E	1"	PULL STRING			AUTOMATIC TRANSFER SWITCH IN MCC	FUTURE RTU CABINET	SPARE CONDUIT FOR FUTURE USE
	X250F	1"	PULL STRING			FUTURE RTU CABINET	FUTURE STANDBY GENERATOR	SPARE CONDUIT FOR FUTURE USE
	C310	3/4"		2-#14	#14	RTU/CONTROL SECTION IN MCC	SERVICE ENTRANCE SECTION	NS-310A & NS-310B
	X312	3/4"	PULL STRING			RTU/CONTROL SECTION IN MCC	FUTURE STANDBY GENERATOR	SPARE CONDUIT FOR FUTURE USE
	C313	3/4"		2-#14	#14	RTU/CONTROL SECTION IN MCC	ELECTRICAL BUILDING DOOR INTRUSION SWITCH	NS-313
	C315	3/4"		2-#14	#14	RTU/CONTROL SECTION IN MCC	ENTRANCE GATE	NS-315
	C319	3/4"		4-#14	#14	RTU/CONTROL SECTION IN MCC	JUNCTION BOX IN ELECTRICAL BUILDING	MS-319 AND 12VDC POWER
	X320A	1"	PULL STRING			FUTURE SECURITY CABINET	STUBUP NEAR SOUTH CORNER OF SITE	SPARE CONDUIT FOR FUTURE PERIMETER DETECTION EQMNT
	X320B	1"	PULL STRING			FUTURE SECURITY CABINET	STUBUP NEAR SOUTH CORNER OF SITE	SPARE CONDUIT FOR FUTURE PERIMETER DETECTION EQMNT
	X321A	1"	PULL STRING			FUTURE SECURITY CABINET	STUBUP NEAR EAST CORNER OF SITE	SPARE CONDUIT FOR FUTURE PERIMETER DETECTION EQMNT
	X321B	1"	PULL STRING			FUTURE SECURITY CABINET	STUBUP NEAR EAST CORNER OF SITE	SPARE CONDUIT FOR FUTURE PERIMETER DETECTION EQMNT
	X322A	1"	PULL STRING			FUTURE SECURITY CABINET	STUBUP NEAR NORTH CORNER OF SITE	SPARE CONDUIT FOR FUTURE PERIMETER DETECTION EQMNT
	X322B	1"	PULL STRING			FUTURE SECURITY CABINET	STUBUP NEAR NORTH CORNER OF SITE	SPARE CONDUIT FOR FUTURE PERIMETER DETECTION EQMNT
	X323A	1"	PULL STRING			FUTURE SECURITY CABINET	STUBUP NEAR WEST CORNER OF SITE	SPARE CONDUIT FOR FUTURE PERIMETER DETECTION EQMNT
	X323B	1"	PULL STRING			FUTURE SECURITY CABINET	STUBUP NEAR WEST CORNER OF SITE	SPARE CONDUIT FOR FUTURE PERIMETER DETECTION EQMNT
	X330	1"	PULL STRING			FUTURE SECURITY CABINET	U/G JUNCTION BOX NEXT TO POLE MOUNTED LIGHT	SPARE CONDUIT FOR FUTURE CAMERA
*	C331A	3/4"	2-#12		#12	RTU/CONTROL SECTION IN MCC	LIGHTING CONTROL CABINET	
	X331B	3/4"	PULL STRING			FUTURE SECURITY CABINET	LIGHTING CONTROL CABINET	SPARE CONDUIT FOR FUTURE USE
	X332	1"	PULL STRING			FUTURE SECURITY CABINET	U/G JUNTION BOX NEXT TO ANTENNA MAST	SPARE CONDUIT FOR FUTURE USE
	C333	3/4"		4-#14	#14	RTU/CONTROL SECTION IN MCC	MOTION DETECTOR ON BLDG EXTERIOR	MS-333 AND 12VDC POWER

* DENOTES CONDUIT NOT INDICATED ON PLAN VIEW(S) OR ELEVATION(S) FOR CLARITY.

480V, 3 ϕ LOAD CALCULATIONS

LOAD DESCRIPTION	KVA	H.P.	AMPS
WELL PUMP	--	250	302.0
DIGITAL METER	0.1	--	0.1
SPD UNIT	0	--	0.0
AIR CONDITIONING UNIT No.1	7.5	--	9.0
AIR CONDITIONING UNIT No.2	7.5	--	9.0
PANELBOARD TRANSFORMER	15	--	31.3
SUBTOTAL =			351.4
+25% OF LARGEST MOTOR (250HP) =			75.5
MINIMUM SERVICE SIZE =			426.9
SELECTED SERVICE SIZE =			600A

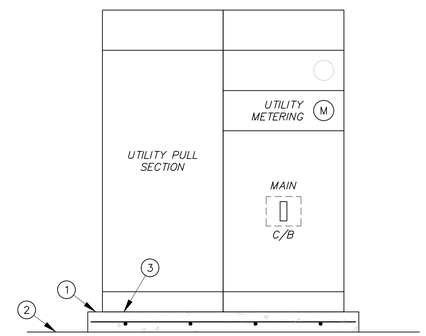

AA E2 SERVICE ENTRANCE SECTION ELEVATION

NTS

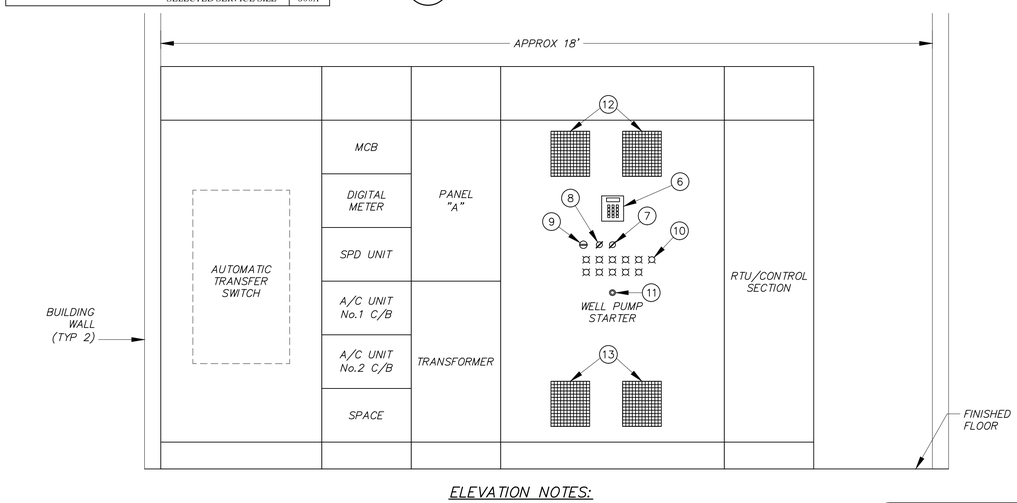

ELEVATION NOTES:

A. CONDUITS NOT SHOWN FOR CLARITY.
B. OUTER DOORS REMOVED.

BB E6 ELECTRICAL EQUIPMENT ELEVATION

NTS

Contact Arizona 811 at least two full working days before you begin excavation
ARIZONA811
Call 811 or click Arizona811.com

E3

DARCOR ELECTRICAL CONSULTING ENGINEERS
7600 N. 16TH ST.
SUITE 212
PHOENIX, AZ 85020
Ph: (602) 795-2699
WWW.DARCORINC.COM

REVISIONS:

1
2
3

PLAN NAME

TARTESSO
WELL SITE NO. 3
CITY OF BUCKEYE

SHEET NAME

SINGLE LINE DIAGRAM

ENGINEER INFORMATION

GHD
4747 North 22nd Street, Suite 200
Phoenix, Arizona 85016 USA
T 1 602 216 7200 F 1 602 216 7201
E phxmail@ghd.com
W www.ghd.com

COB PERMITTING APPROVED SEAL

COB ENGINEERING APPROVED SEAL

SUBMITTAL: 3RD SUBMITTAL
FINAL PLANS

AS-BUILT SEAL

DESIGN SEAL

Registered Professional Engineer (Civil)
CERTIFICATE NO. 53839
JORGE GERARDO
3/25/16
Date Signed
ARIZONA, U.S.A.
Expires 9/30/16

COB PLAN TRACKING # ENG-14-00445

COB PLAN TRACKING # ENG-14-00445

ORIGINAL PLAN DATE MAY 2008

LATEST REVISION DATE MARCH 2016

PROJECT NUMBER 84-11109067

SHEET NUMBER 9 of 16

COB PERMIT #

Saved: March 25, 2016 File: 15040-WELL 3-E3.dwg Drafter: Dgriffin

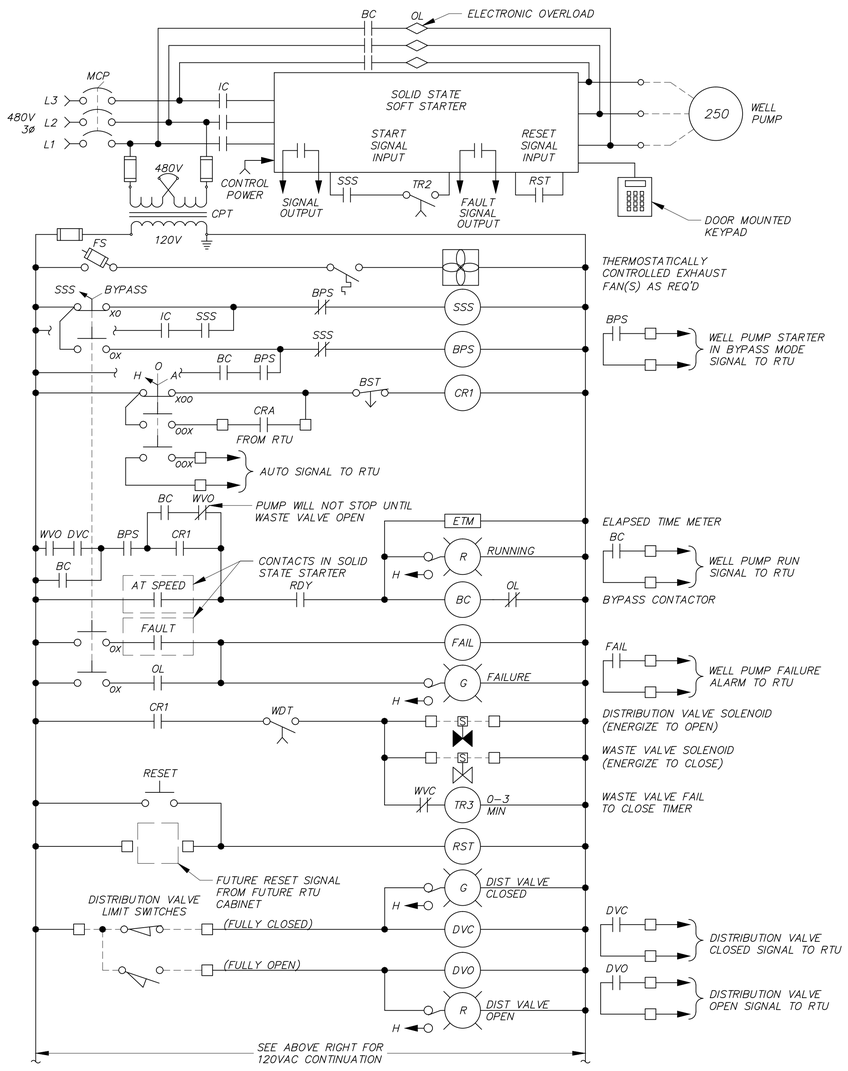

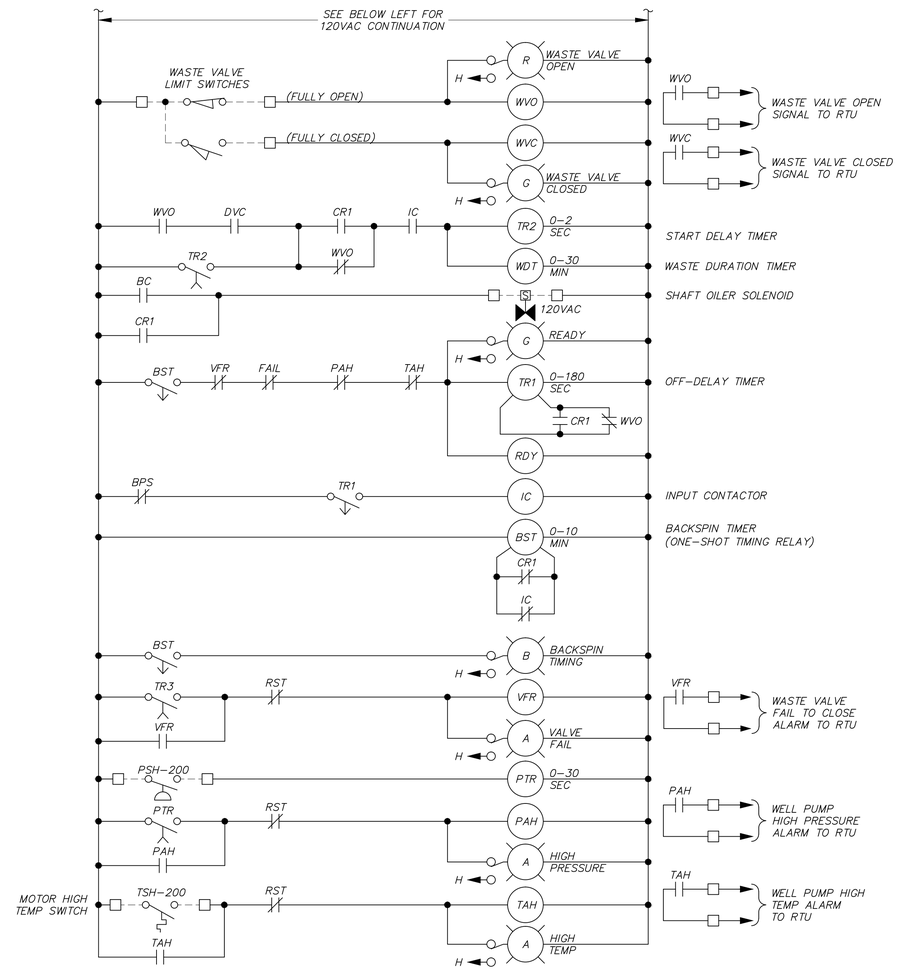

NOTE: REFER TO THE CONTROL DESCRIPTIONS IN THE SPECIFICATIONS FOR VALVE OPERATION.

WELL PUMP MOTOR CONTROL SCHEMATIC

Contact Arizona 811 at least two full working days before you begin excavation

ARIZONA 811

Call 811 or click ArizonaBlue.com

E4

DARCOR ELECTRICAL CONSULTING ENGINEERS

7600 N. 16TH ST.
SUITE 212
PHOENIX, AZ 85020
Ph: (602) 795-2699
WWW.DARCORINC.COM

REVISIONS:

1

2

3

PLAN NAME

TARTESSO
WELL SITE NO. 3
CITY OF BUCKEYE

SHEET NAME

CONTROL SCHEMATICS - I

ENGINEER INFORMATION

GHD

4747 North 22nd Street, Suite 200
Phoenix, Arizona 85016 USA
T 1 602 216 7200 F 1 602 216 7201
E phxmail@ghd.com
W www.ghd.com

COB PERMITTING APPROVED SEAL

COB ENGINEERING APPROVED SEAL

SUBMITTAL: 3RD SUBMITTAL FINAL PLANS

AS-BUILT SEAL

DESIGN SEAL

Registered Professional Engineer (Electrical)
CERTIFICATE NO.
53839
JORGE GERARDO
3/25/16
Date Signed
ARIZONA, U.S.A.
Expires 9/30/16

COB PLAN TRACKING # ENG-14-00445

COB PERMIT # ENG-14-00445

ORIGINAL PLAN DATE
MAY 2008

LATEST REVISION DATE
MARCH 2016

PROJECT NUMBER
84-11109067

SHEET NUMBER
10 of 16

Saved: March 25, 2016 File: 15040-WELL 3-E4.dwg Drafter: Dgriffin

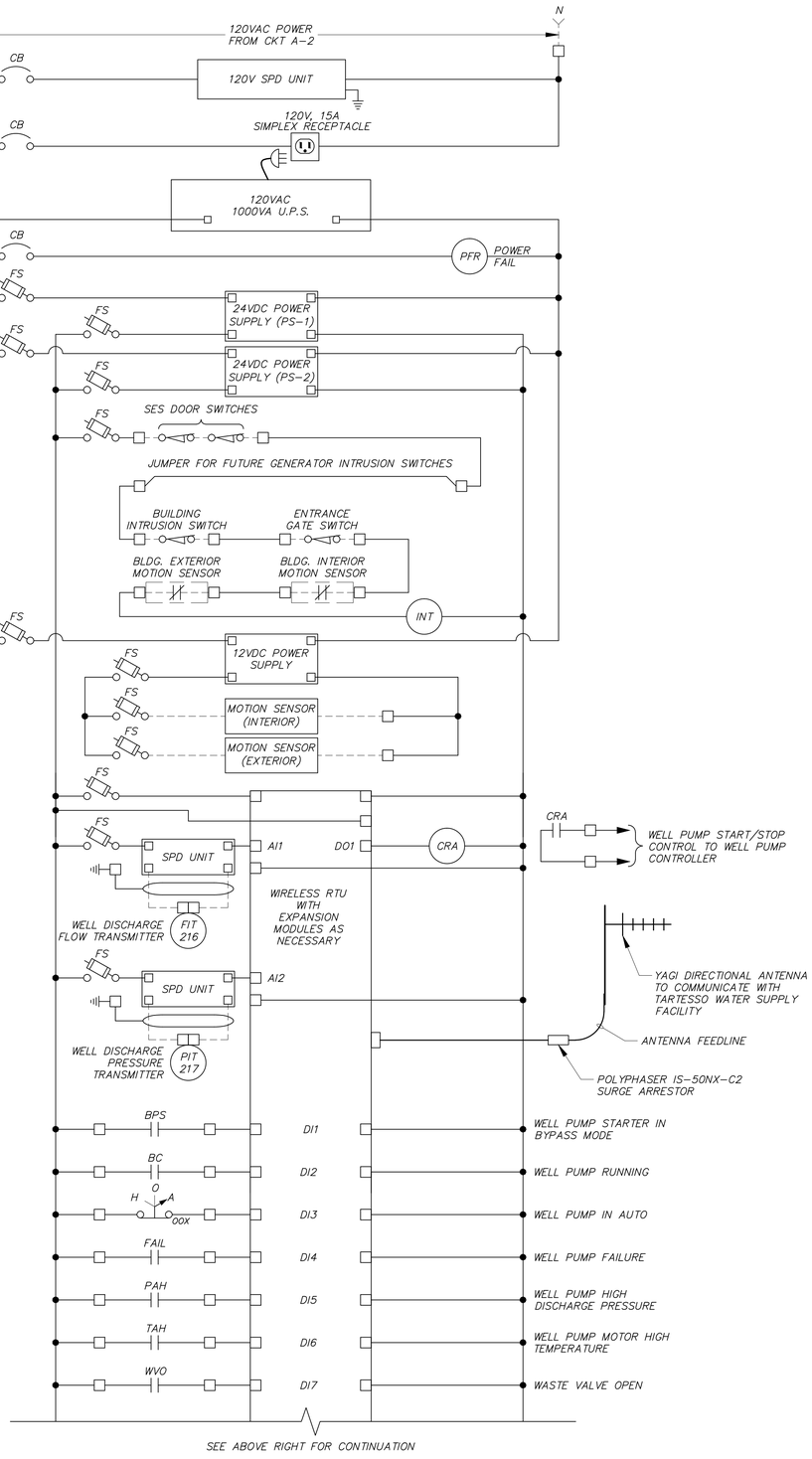

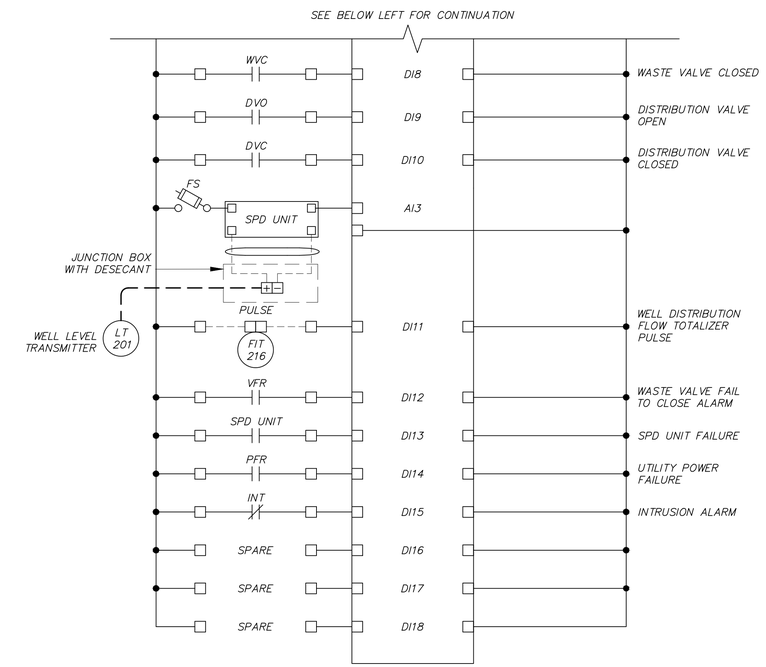

RTU/CONTROL SECTION SCHEMATIC DIAGRAM

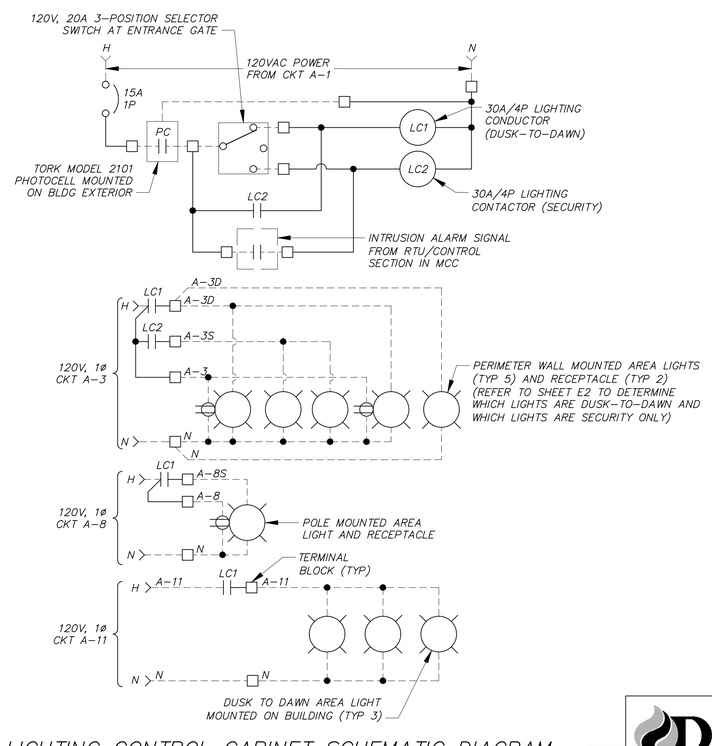

LIGHTING CONTROL CABINET SCHEMATIC DIAGRAM

Contact Arizona 811 at least two full working days before you begin excavation

ARIZONA 811

Call 811 or click Arizona811.com

DARCOR ELECTRICAL CONSULTING ENGINEERS

7600 N. 16TH ST.
SUITE 212
PHOENIX, AZ 85020
Ph: (602) 795-2699
WWW.DARCORINC.COM

E5

REVISIONS:

1

2

3

PLAN NAME

TARTESSO
WELL SITE NO. 3
CITY OF BUCKEYE

SHEET NAME

CONTROL SCHEMATICS - II

ENGINEER INFORMATION

GHD

4747 North 22nd Street, Suite 200
Phoenix, Arizona 85016 USA
T 1 602 216 7200 F 1 602 216 7201
E phxmail@ghd.com
W www.ghd.com

COB PERMITTING APPROVED SEAL	COB ENGINEERING APPROVED SEAL
AS-BUILT SEAL	DESIGN SEAL: Registered Professional Engineer (Electrical) CERTIFICATE NO. 53839 JORGE GERARDO 3/25/16 Date Signed ARIZONA, U.S.A. Expires 9/30/16
ORIGINAL PLAN DATE: MAY 2008	LATEST REVISION DATE: MARCH 2016
PROJECT NUMBER: 84-11109067	SHEET NUMBER: 11 of 16

SUBMITTAL: 3RD SUBMITTAL **FINAL PLANS**

COB PLAN TRACKING # ENG-14-00445

COB PERMIT # ENG-14-00445

Saved: March 25, 2016 File: 15040-WELL 3-E5.dwg Drafter: Dgriffin

ANTENNA NOTES:

1. VERIFY PROPER COMMUNICATION SIGNAL STRENGTH AT THIS HEIGHT BEFORE INSTALLATION OF ANTENNA MAST OR MAST FOUNDATION. REFER TO SPECIFICATIONS FOR MORE INFORMATION. IF A TALLER POLE IS REQUIRED, SEE NOTE 2.
2. THESE DIMENSIONS AND REBAR SIZES ARE BASED ON THE ANTENNA MOUNTING HEIGHT OF 20'–0". IF A TALLER POLE IS REQUIRED, PER NOTE 1, THE SIZE OF THE CONCRETE BASE AND REBAR SHALL BE INCREASED PER THE POLE MANUFACTURER RECOMMENDATIONS.

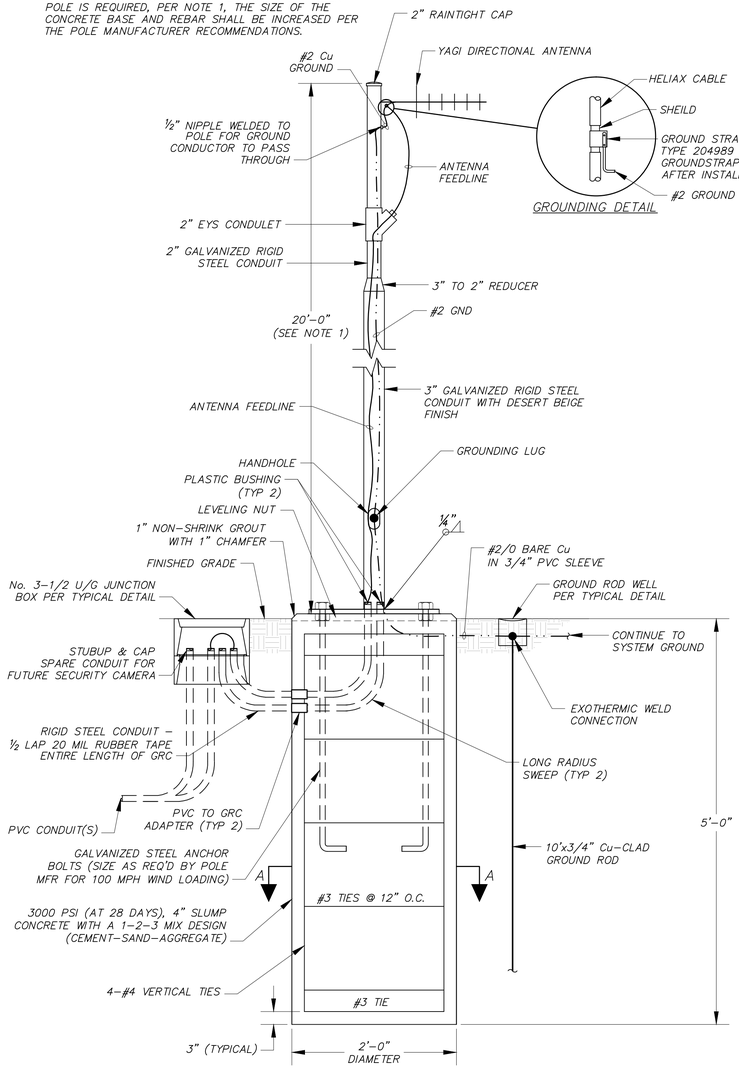

GROUNDING DETAIL

ELEVATION

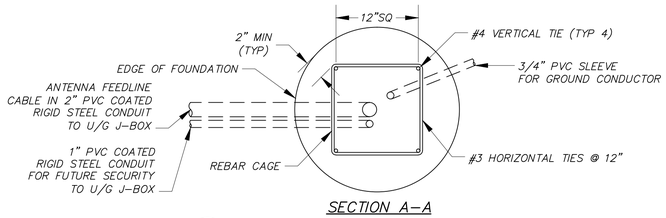

SECTION A–A

A / E7 RTU ANTENNA POLE DETAIL

NTS

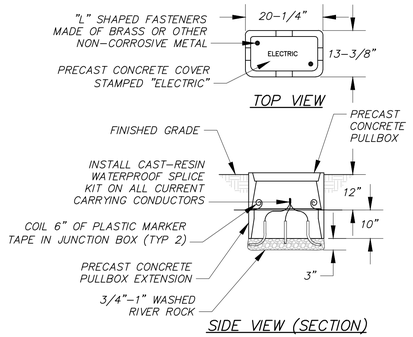

SIDE VIEW (SECTION)

E / TYP #3–1/2 UNDERGROUND JUNCTION BOX DETAIL

NTS

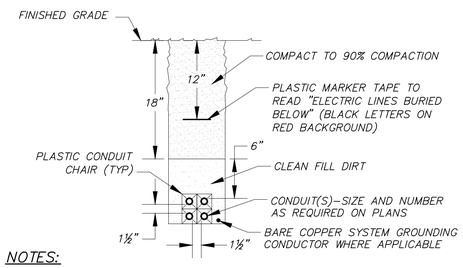

NOTES:

1. ALL DIMENSIONS INDICATED ABOVE ARE MINIMUM.
2. SPARE CONDUITS MUST BE LOCATED ON TOP OF DUCTBANKS.
3. THIS DETAIL APPLIES IN ALL CASES WHETHER SPECIFICALLY REFERRED TO OR NOT.
4. THIS DETAIL DOES NOT APPLY TO UTILITY DUCTBANKS.

C / TYP TYPICAL UNDERGROUND CONDUIT DUCTBANK DETAIL

NTS

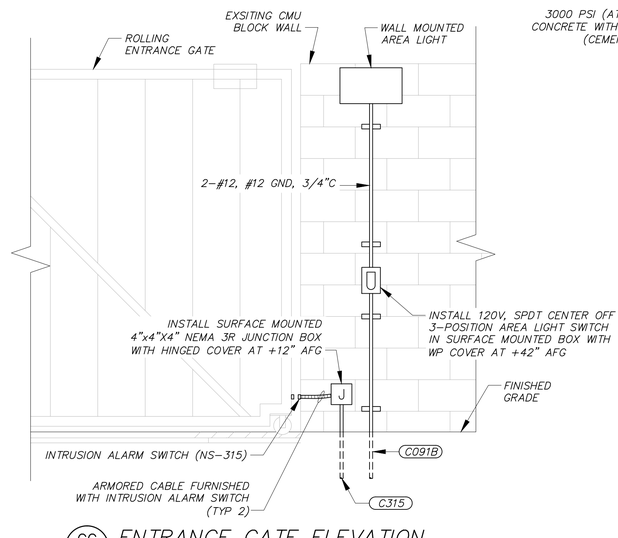

CC / E2 ENTRANCE GATE ELEVATION

NTS

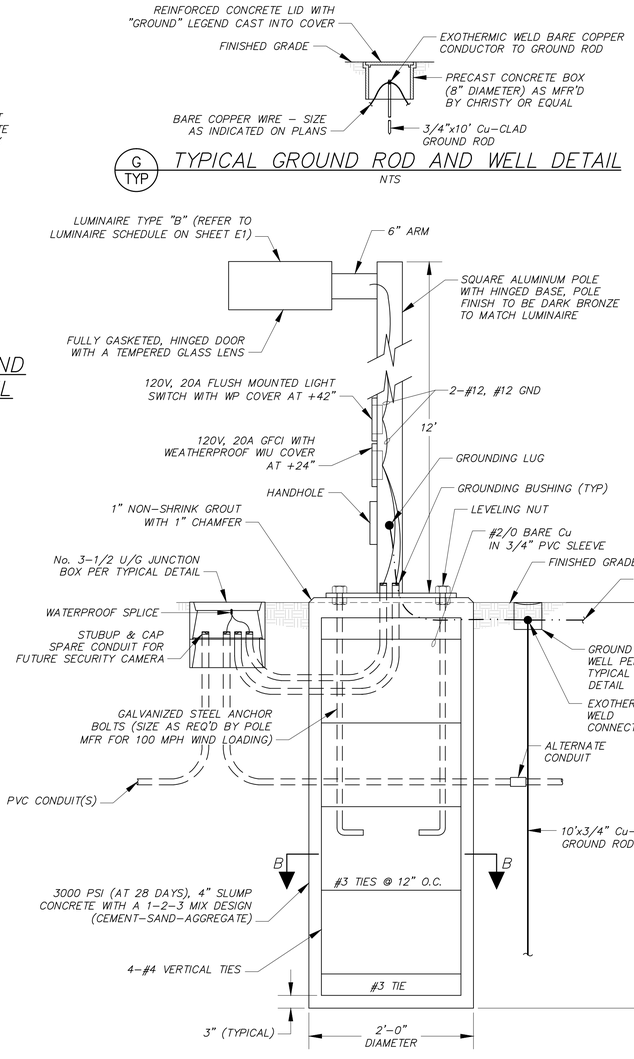

G / TYP TYPICAL GROUND ROD AND WELL DETAIL

NTS

ELEVATION

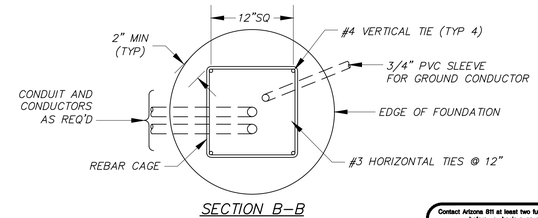

SECTION B–B

B / E2 AREA LIGHT DETAIL

NTS

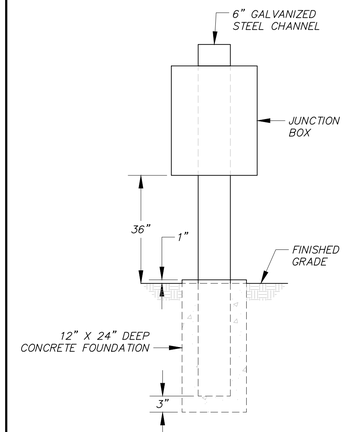

NOTE: CONDUITS NOT SHOWN FOR CLARITY.

F / TYP TYPICAL ABOVE GROUND JUNCTION BOX MOUNTING DETAIL

NTS

Contact Arizona 811 at least two full working days before you begin excavation

ARIZONA 811

Call 811 or click Arizona811.com

DARCOR ELECTRICAL CONSULTING ENGINEERS
7600 N. 16TH ST.
SUITE 212
PHOENIX, AZ 85020
Ph: (602) 795–2699
WWW.DARCORINC.COM

E6

REVISIONS:

1

2

3

PLAN NAME

TARTESSO
WELL SITE NO. 3
CITY OF BUCKEYE

SHEET NAME

ELECTRICAL DETAILS

ENGINEER INFORMATION

GHD

4747 North 22nd Street, Suite 200
Phoenix, Arizona 85016 USA
T 1 602 216 7200 F 1 602 216 7201
E phxmail@ghd.com
W www.ghd.com

COB PERMITTING APPROVED SEAL

COB ENGINEERING APPROVED SEAL

AS-BUILT SEAL

DESIGN SEAL

Registered Professional Engineer (Electrical) CERTIFICATE NO. 53839 JORGE GERARDO 3/25/16 Date Signed ARIZONA, U.S.A. Expires 9/30/16

SUBMITTAL: 3RD SUBMITTAL FINAL PLANS

ORIGINAL PLAN DATE	LATEST REVISION DATE
MAY 2008	MARCH 2016
PROJECT NUMBER	SHEET NUMBER
84-11109067	12 of 16

COB PLAN TRACKING # ENG-14-00445

COB PLAN TRACKING # ENG-14-00445

COB PERMIT #

Saved: March 25, 2016 File: 15040–WELL 3–E6.dwg Drafter: Dgriffin

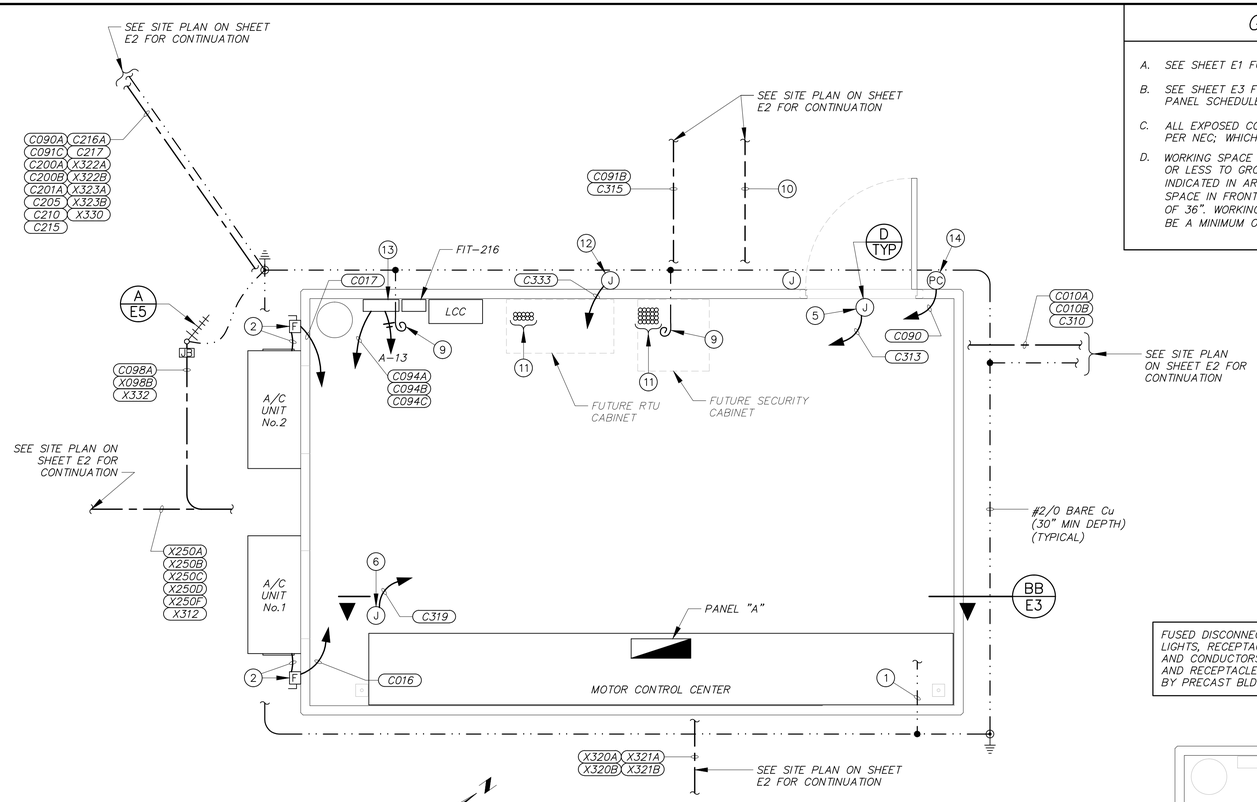

ELECTRICAL BUILDING POWER PLAN

0 2 4 6

SCALE IN FEET

GENERAL NOTES

A. SEE SHEET E1 FOR LUMINAIRE SCHEDULE.

B. SEE SHEET E3 FOR CONDUIT & CONDUCTOR SCHEDULE AND PANEL SCHEDULE.

C. ALL EXPOSED CONDUIT SHALL BE SUPPORTED AS SPECIFIED OR PER NEC; WHICHEVER IS THE MORE STRINGENT REQUIREMENT.

D. WORKING SPACE FOR EQUIPMENT OPERATING AT 600V, NOMINAL, OR LESS TO GROUND SHALL COMPLY WITH THE DIMENSIONS INDICATED IN ARTICLE 110.26(A)(1) PER 2005 NEC. WORKING SPACE IN FRONT OF 120/240VAC EQUIPMENT SHALL BE A MINIMUM OF 36". WORKING SPACE IN FRONT OF 480VAC EQUIPMENT SHALL BE A MINIMUM OF 48".

KEY NOTES

1. BOND ELECTRICAL EQUIPMENT TO GROUND RING WITH #2/0 BARE COPPER (EXOTERMIC WELD).
2. NEMA 3R FUSED DISCONNECT SWITCH AND CONDUIT AND CONDUCTORS TO AIR CONDITIONING UNIT INSTALLED BY PRECAST BLDG MFR.
3. SURFACE MOUNTED RECEPTACLE IN BELL BOX WITH ANODIZED ALUMINUM COVER INSTALLED BY PRECAST BLDG MFR.
4. INSTALL 4-#12 (CKT's A-4 & A-6), #12 GND, 1"C BETWEEN THE MCC AND THE JUNCTION BOX. SPLICE CONDUCTORS TO CONDUCTORS INSTALLED BY PRECAST BUILDING MFR FOR LIGHTS AND RECEPTACLES.
5. INSTALL "FS" TYPE JUNCTION BOX ABOVE BUILDING DOOR FOR SECURITY AND ACCESS CONTROL. SEE DOOR DETAIL "F" ON SHEET E5 (NS-313).
6. INSTALL MOTION DETECTOR ON "FS" TYPE JUNCTION BOX MOUNTED ON CEILING (MS-319).
7. INSTALL 2-#12, #12 GND, 1"C BETWEEN THE LIGHTING CONTROL CABINET AND THE JUNCTION BOX. SPLICE CONDUCTORS TO CONDUCTORS INSTALLED BY PRECAST BUILDING MFR FOR EXTERIOR WALL MOUNTED LIGHTS.
8. JUNCTION BOX INSTALLED ABOVE MCC NEAR CEILING BY PRECAST BUILDING MFR.
9. COIL 36" OF #2/0 BARE COPPER GROUND CONDUCTOR FOR FUTURE USE.
10. INSTALL (2) 2" CONDUITS, TRENCH AND BACKFILL TO FUTURE SECURITY CABINET PER TYPICAL TELEPHONE COMPANY REQUIREMENTS.
11. STUBUP AND CAP SPARE CONDUITS AT 6" ABOVE FINISHED FLOOR.
12. INSTALL MOTION DETECTOR ON "FS" TYPE JUNCTION BOX MOUNTED AS HIGH AS POSSIBLE ON BLDG EXTERIOR WALL.
13. FIRE SUPPRESSION SYSTEM CONTROL PANEL.
14. INSTALL PHOTOCELL ON "FS" TYPE JUNCTION BOX MOUNTED ON BUILDING EXTERIOR WALL AT 8' AFG.

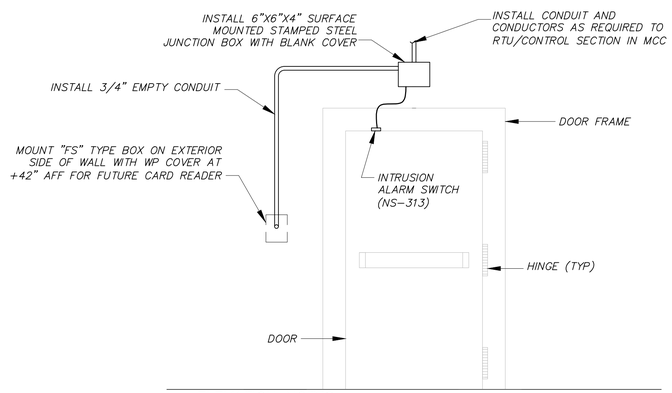

ELEVATION NOTES:

1. NO CONDUIT SHALL BE IN CONTACT WITH REINFORCING STEEL. PROVIDE 1" MINIMUM CLEARANCE.
2. NO METAL CONDUIT SHALL BE INSTALLED WITHIN GROUTED CELLS.
3. INTERIOR VIEW.

D TYP TYPICAL BUILDING SINGLE DOOR ELEVATION

NTS

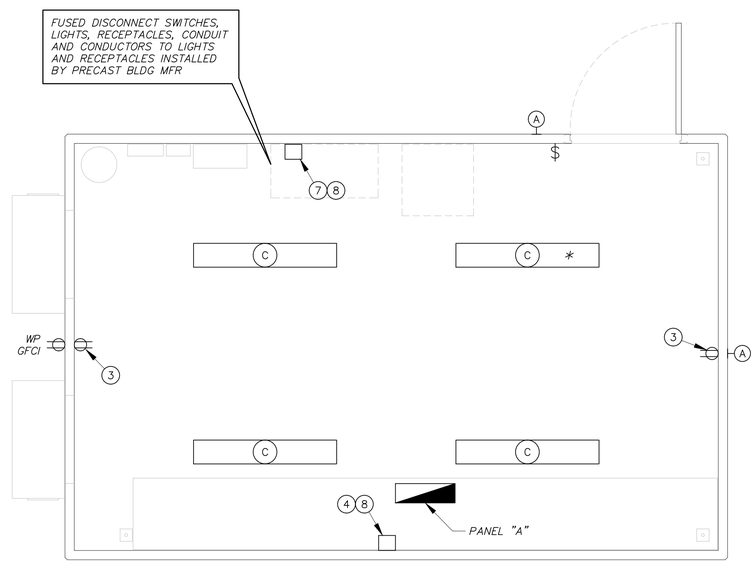

ELECTRICAL BUILDING LIGHTING & RECEPTACLE PLAN

0 2 4 6

SCALE IN FEET

Contact Arizona 811 at least two full working days before you begin excavation

ARIZONA 811

Call 811 or click Arizona811.com

E7

DARCOR ELECTRICAL CONSULTING ENGINEERS

7600 N. 16TH ST.
SUITE 212
PHOENIX, AZ 85020
Ph: (602) 795-2699
WWW.DARCORINC.COM

REVISIONS:

1

2

3

PLAN NAME

TARTESSO
WELL SITE NO. 3
CITY OF BUCKEYE

SHEET NAME

ENLARGED ELECTRICAL BUILDING PLAN

ENGINEER INFORMATION

GHD

4747 North 22nd Street, Suite 200
Phoenix, Arizona 85016 USA
T 1 602 216 7200 F 1 602 216 7201
E phxmail@ghd.com
W www.ghd.com

COB PERMITTING APPROVED SEAL

COB ENGINEERING APPROVED SEAL

SUBMITTAL: 3RD SUBMITTAL FINAL PLANS

AS-BUILT SEAL

DESIGN SEAL

Registered Professional Engineer (Civil) CERTIFICATE NO. 53839 JORGE GERARDO 3/25/16 Date Signed ARIZONA, U.S.A. Expires 9/30/16

COB PLAN TRACKING # ENG-14-00445

COB PERMIT # ENG-14-00445

ORIGINAL PLAN DATE	LATEST REVISION DATE
MAY 2008	MARCH 2016
PROJECT NUMBER	SHEET NUMBER
84-11109067	13 of 16

Saved: March 25, 2016 File: 15040-WELL 3-E7.dwg Drafter: Dgriffin

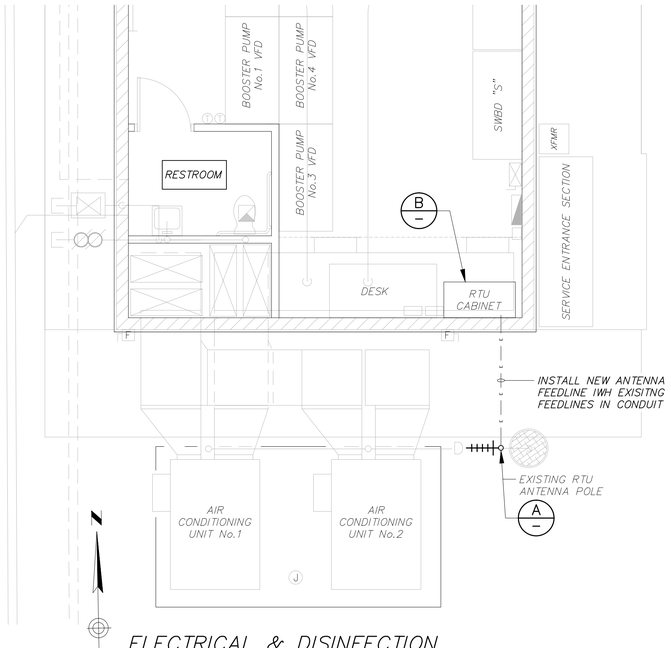

ELECTRICAL & DISINFECTION BUILDING POWER PLAN

0 4 8 12

SCALE IN FEET

ANTENNA NOTE:

1. VERIFY PROPER COMMUNICATION SIGNAL STRENGTH AT THIS HEIGHT BEFORE INSTALLATION OF ANTENNA. REFER TO SPECIFICATIONS FOR MORE INFORMATION.

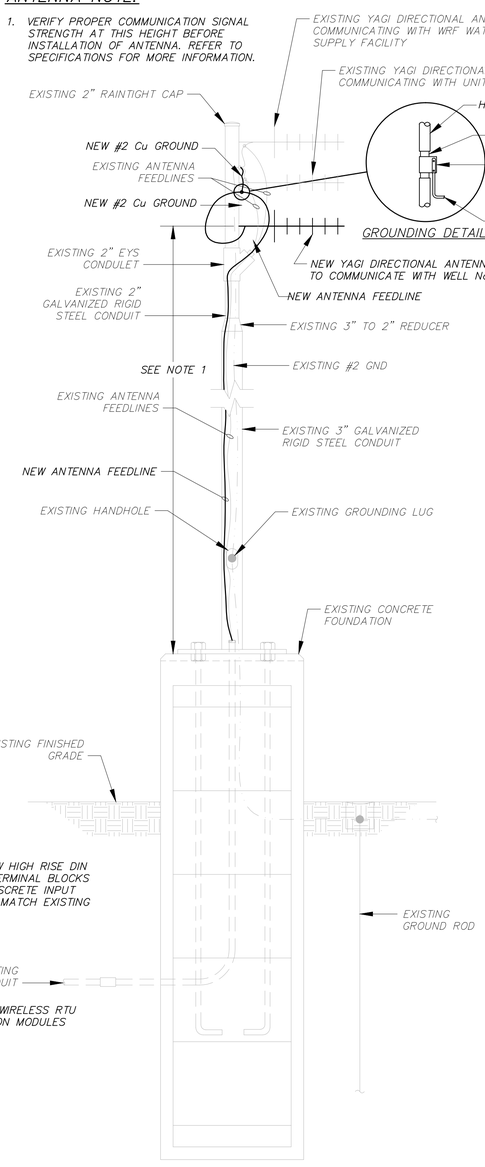

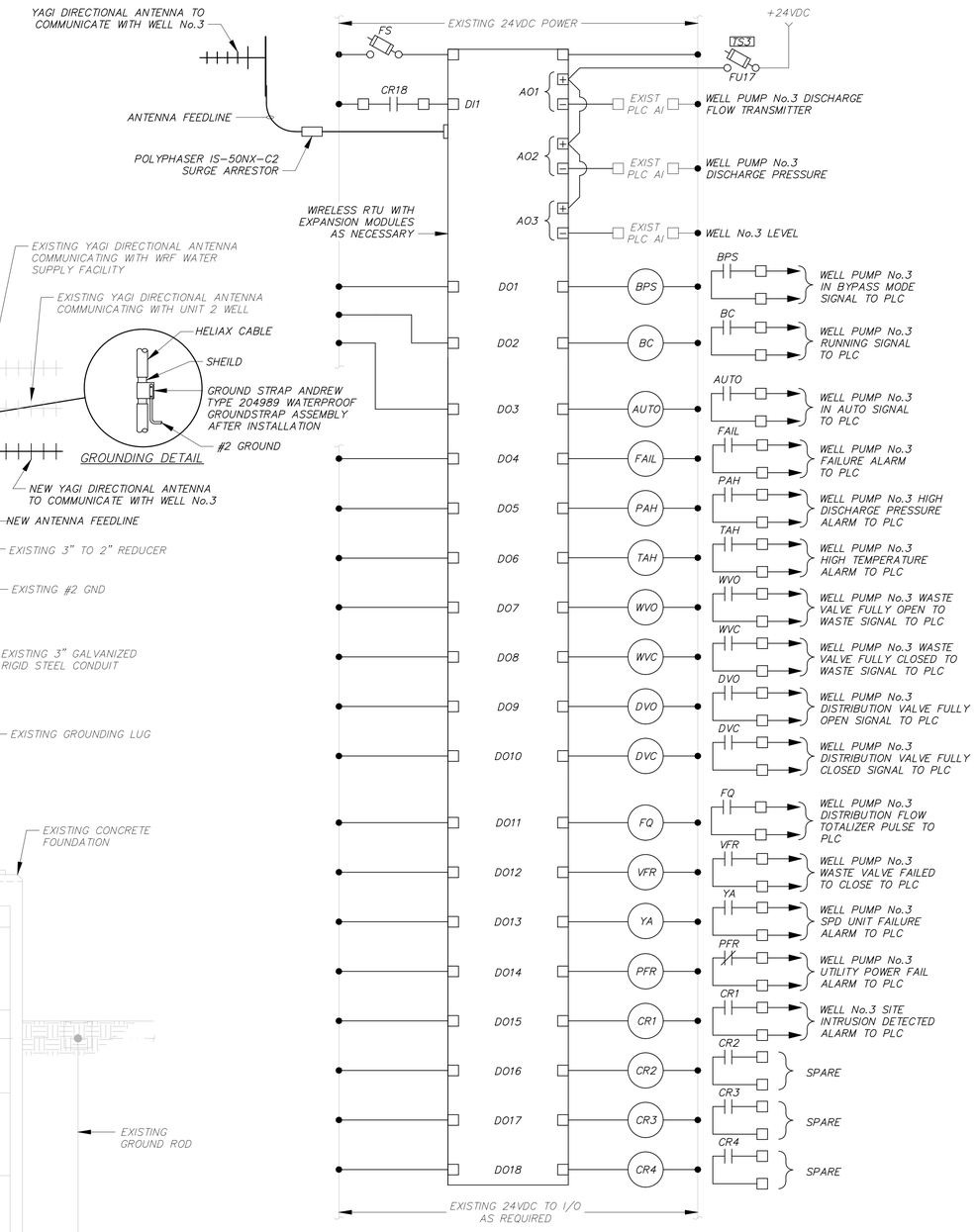

EXISTING RTU CABINET MODIFICATIONS

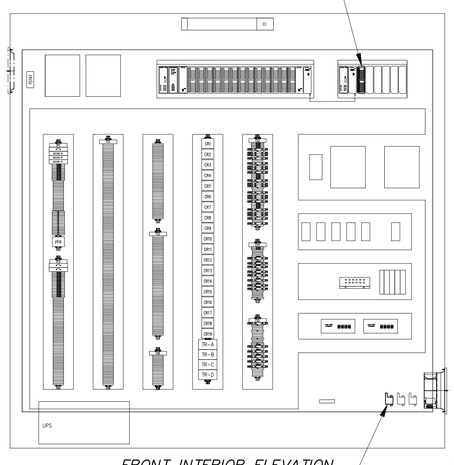

FRONT INTERIOR ELEVATION

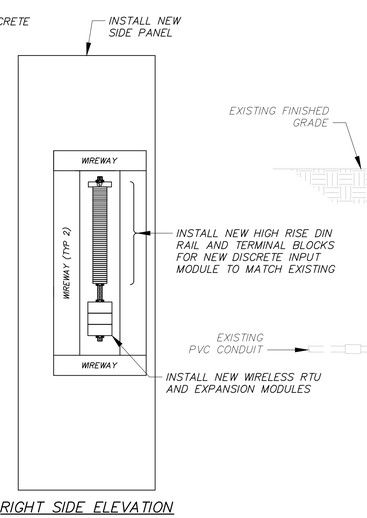

RIGHT SIDE ELEVATION

B EXISTING RTU CABINET MODIFICATIONS
NTS

A EXISTING RTU ANTENNA POLE MODIFICATIONS
NTS

Contact Arizona 811 at least two full working days before you begin excavation
ARIZONA811
Call 811 or click Arizona811.com

DARCOR ELECTRICAL CONSULTING ENGINEERS
7600 N. 16TH ST.
SUITE 212
PHOENIX, AZ 85020
Ph: (602) 795-2699
WWW.DARCORINC.COM

E8

REVISIONS:
1
2
3

PLAN NAME
TARTESSO
WELL SITE NO. 3
CITY OF BUCKEYE

SHEET NAME
WSF MODIFICATIONS

ENGINEER INFORMATION
GHD
4747 North 22nd Street, Suite 200
Phoenix, Arizona 85016 USA
T 1 602 216 7200 F 1 602 216 7201
E phxmail@ghd.com
W www.ghd.com

COB PERMITTING APPROVED SEAL
COB ENGINEERING APPROVED SEAL
AS-BUILT SEAL
DESIGN SEAL
Registered Professional Engineer (Civil)
CERTIFICATE NO. 53539
JORGE GERARDO
3/25/16
Date Signed
ARIZONA, U.S.A.
Expires 9/30/16

SUBMITTAL: 3RD SUBMITTAL
FINAL PLANS

ORIGINAL PLAN DATE MAY 2008	LATEST REVISION DATE MARCH 2016
PROJECT NUMBER 84-11109067	SHEET NUMBER 14 of 16

COB PLAN TRACKING # ENG-14-00445
COB PLAN TRACKING #
COB PERMIT # ENG-14-00445

Saved:March 25, 2016 File:15040-WELL 3-E8.dwg Drafter:Jgerardo

INSTRUMENT IDENTIFICATION TABLE

	FIRST LETTER	SUCCEEDING LETTER(S)	
	MEASURED VARIABLE	OUTPUT FUNCTION	MODIFIER
A	ANALYSIS	ALARM	
B	BURNER , COMBUSTION		
C	CONDUCTIVITY	CONTROL	CLOSED
D	DENSITY	DIFFERENTIAL	
E	VOLTAGE	PRIMARY ELEMENT	
F	FLOW RATE	FAILURE	FAST
G	GAUGE	GLASS, VIEWING DEVICE	
H	HAND (MANUAL)		HIGH
I	CURRENT (ELECTRICAL)	INDICATE	
J	POWER		
K	TIME, RATE OF CHANGE		
L	LEVEL		LOW
M	MOTION		MIDDLE
N	INTRUSION		NORMAL
O	TORQUE		OPEN
P	PRESSURE, VACUUM		
Q	QUANTITY	INTEGRATE, TOTALIZE	
R	RADIATION	RECORD OR PRINT	
S	SPEED, FREQUENCY	SWITCH	SLOW
T	TEMPERATURE	TRANSMIT	
U	MULTIVARIABLE	MULTIFUNCTION	MULTIFUNCTION
V	VIBRATION	VALVE, LOUVER	
W	WEIGHT, FORCE	WELL	
X	UNCLASSIFIED	UNCLASSIFIED	UNCLASSIFIED
Y	EVENT, STATE, PRESENCE	RELAY, COMPUTE, CONVERT	
Z	POSITION	DRIVER, ACTUATOR,	

ABBREVIATIONS

AI	ANALOG INPUT
AO	ANALOG OUTPUT
B/S	BYPASS/SOLID STATE STARTER
CV	CONTROL VALVE
D	DECANT WATER
DCS	DISTRIBUTED CONTROL SYSTEM
DI	DIGITAL INPUT
DO	DIGITAL OUTPUT
DS	DIGESTED SLUDGE
ETM	ELAPSED TIME METER
FA	FOUL AIR
FC	FAIL CLOSED
FE	FINAL EFFLUENT
FeCL2	FERROUS CHLORIDE
F/S	FAST/SLOW
GS	GRIT SLURRY
HOA	HAND–OFF–AUTO
HOR	HAND–OFF–REMOTE
HS	HYDRAULIC SUPPLY
HMI	HUMAN MACHINE INTERFACE
I/O	INPUT/OUTPUT
IAS	INSTRUMENT AIR SUPPLY
L/R	LOCAL/REMOTE
LAN	LOCAL AREA NETWORK
LCP	LOCAL CONTROL PANEL
M/A	MANUAL/AUTO
MCC	MOTOR CONTROL CENTER
MMI	MAN MACHINE INTERFACE
MH	MANHOLE
NaOCL	SODIUM HYPOCHLORITE
NPW	NON POTABLE WATER
NS	NITROGEN SUPPLY
NaHSO3	SODIUM BISULFATE
NTU	TURBIDITY
OF	OVER FLOW
OIS	OPERATOR INTERFACE STATION
OL	OVERLOAD
OT	OVERTORQUE
O/O	ON/OFF (MAINTAINED)
PCP	PROCESS CONTROL PANEL
PI	PROCESS INFLUENT
PLC	PROGRAMMABLE LOGIC CONTROLLER
PS	PRIMARY SLUDGE
RAS	RETURN ACTIVATED SLUDGE
RF	RADIO FREQUENCY
RIO	REMOTE INPUT/OUTPUT
RS	RAW SEWAGE
RST	RESET
SBR	SEQUENCING BATCH REACTOR
SLC	SINGLE LOOP CONTROLLER
SP	SET POINT
SPD	SPEED
SPC	SET POINT CONTROL
S/S	START/STOP (MOMENTARY)
SSS	SOLID STATE SOFT STARTER
SW	SEAL WATER
TPS	THICKENED PRIMARY SLUDGE
TWAS	THICKENED WASTE ACTIVATED SLUDGE
UW	UTILITY/PROCESS WATER
VFD	VARIABLE FREQUENCY DRIVE
WAS	WASTE ACTIVATED SLUDGE
1/2/B	PUMP 1/PUMP 2/BOTH

INSTRUMENT SYMBOLS

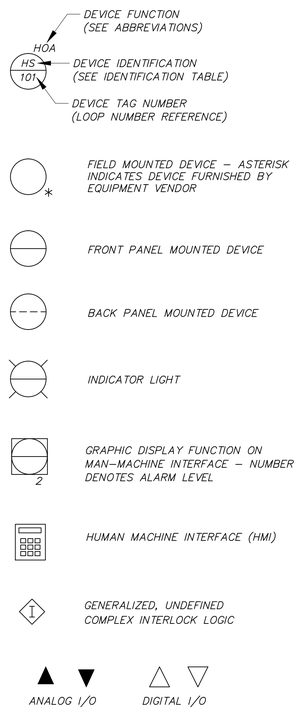

INSTRUMENT LINES

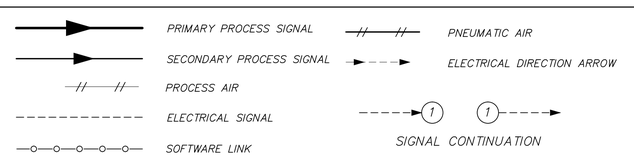

PROCESS FLOW AND MECHANICAL EQUIPMENT SYMBOLS

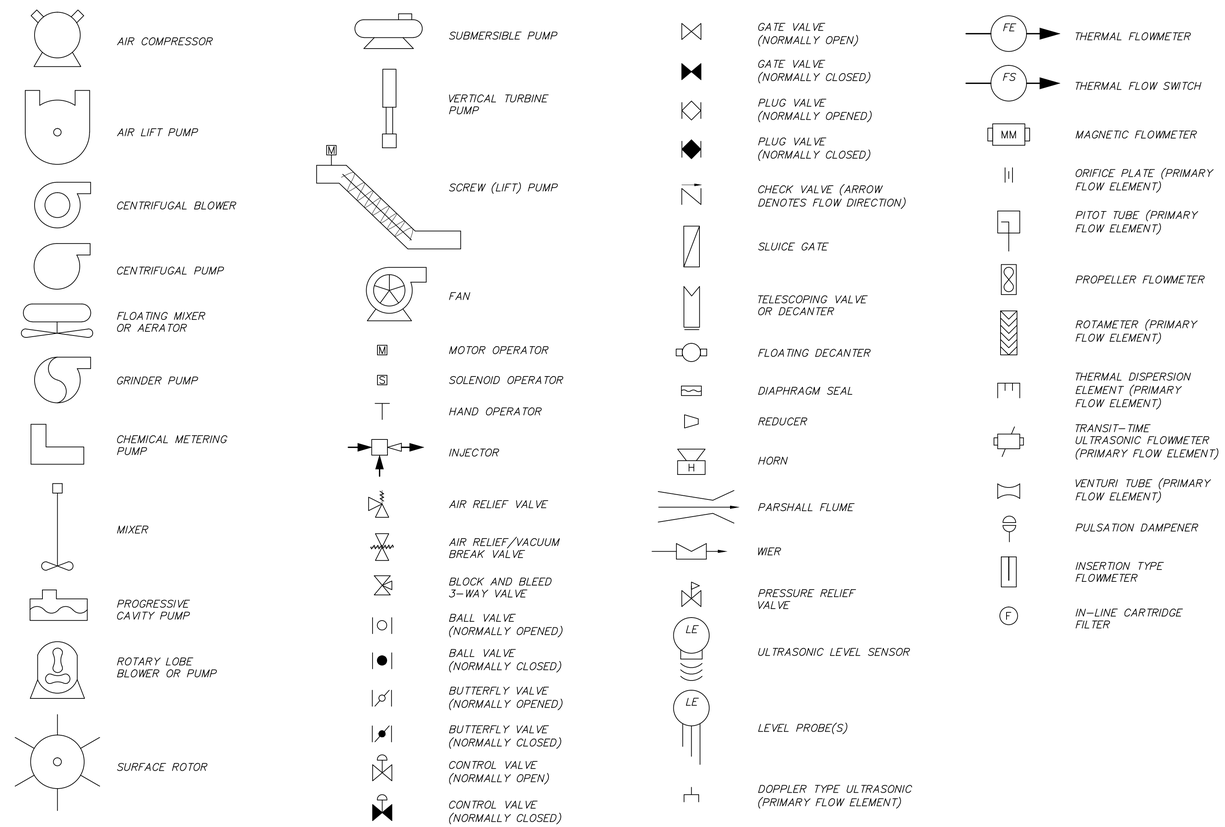

SCADA BLOCK DIAGRAM

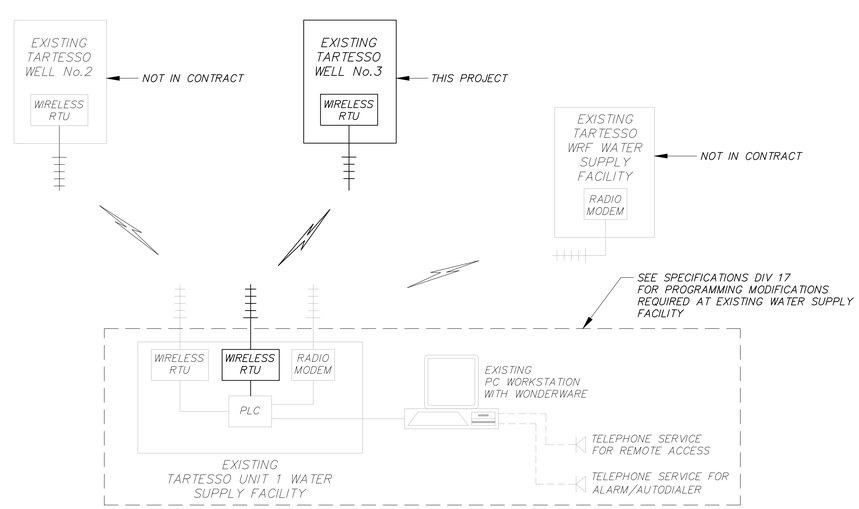

Contact Arizona 811 at least two full working days before you begin excavation
ARIZONA 811
Call 811 or click Arizona811.com

DARCOR
ELECTRICAL CONSULTING ENGINEERS
7600 N. 16TH ST.
SUITE 212
PHOENIX, AZ 85020
Ph: (602) 795–2699
WWW.DARCORINC.COM

I1

REVISIONS:

1

2

3

PLAN NAME

TARTESSO
WELL SITE NO. 3
CITY OF BUCKEYE

SHEET NAME

P & ID - I

ENGINEER INFORMATION
GHD
4747 North 22nd Street, Suite 200
Phoenix, Arizona 85016 USA
T 1 602 216 7200 F 1 602 216 7201
E phxmail@ghd.com
W www.ghd.com

COB PERMITTING APPROVED SEAL

COB ENGINEERING APPROVED SEAL

SUBMITTAL: 3RD SUBMITTAL
FINAL PLANS

AS-BUILT SEAL

DESIGN SEAL
Registered Professional Engineer (Electrical)
CERTIFICATE NO. 53839
JORGE GERARDO
3/25/16
Date Signed
ARIZONA, U.S.A.
Expires 9/30/16

ORIGINAL PLAN DATE	LATEST REVISION DATE
MAY 2008	MARCH 2016
PROJECT NUMBER	SHEET NUMBER
84-11109067	15 of 16

COB PLAN TRACKING # ENG-14-0045

COB PLAN TRACKING #

COB PERMIT # ENG-14-0045

Saved: March 25, 2016 File: 15040–WELL 3–I1.dwg Drafter: Dgriffin

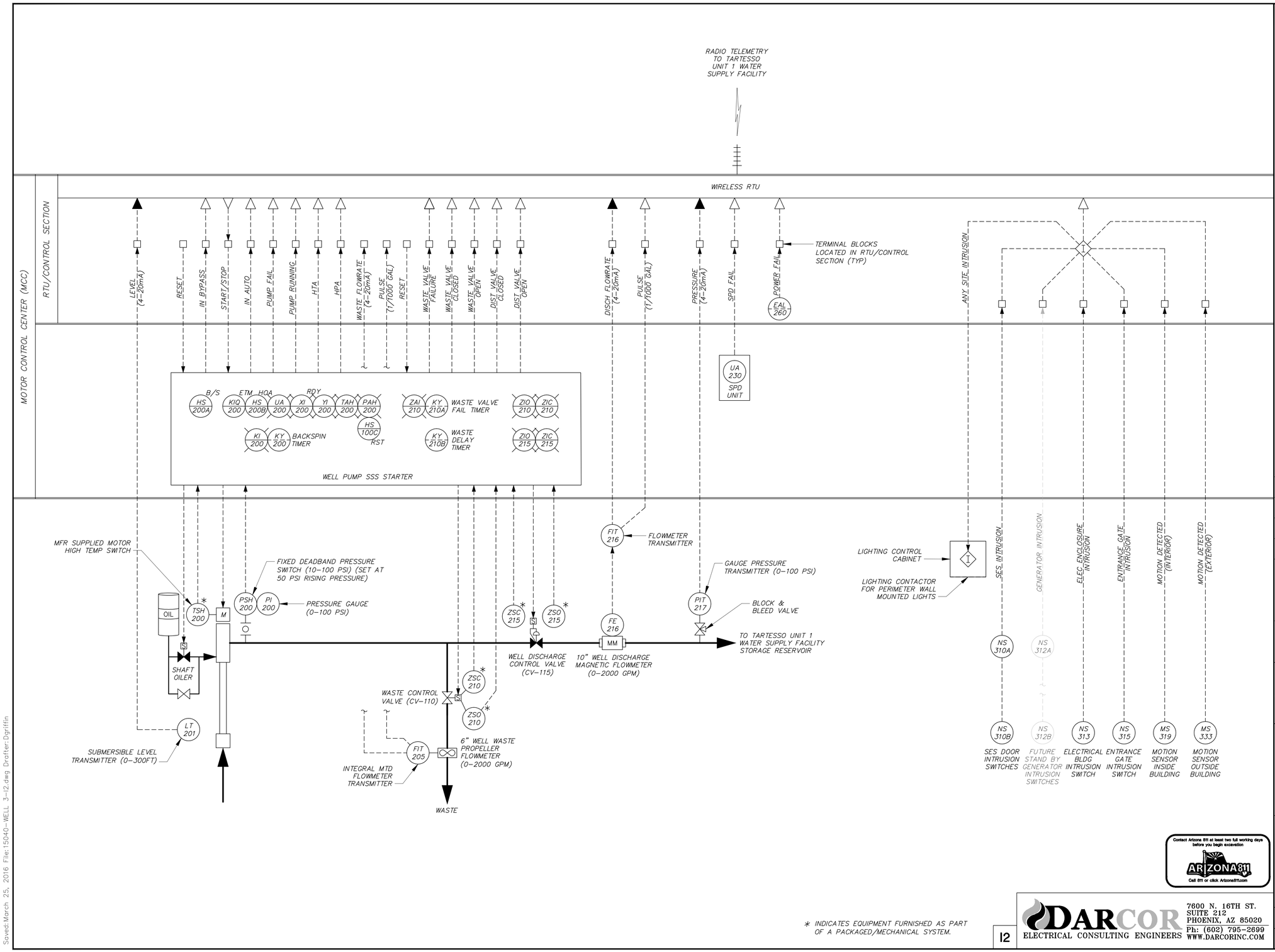

* INDICATES EQUIPMENT FURNISHED AS PART OF A PACKAGED/MECHANICAL SYSTEM.

Contact Arizona 811 at least two full working days before you begin excavation
ARIZONA811
Call 811 or click Arizona811.com

12

DARCOR ELECTRICAL CONSULTING ENGINEERS
7600 N. 16TH ST.
SUITE 212
PHOENIX, AZ 85020
Ph: (602) 795-2699
WWW.DARCORINC.COM

REVISIONS:
1
2
3

PLAN NAME
TARTESSO
WELL SITE NO. 3
CITY OF BUCKEYE

SHEET NAME
P & ID - II

ENGINEER INFORMATION
GHD
4747 North 22nd Street, Suite 200
Phoenix, Arizona 85016 USA
T 1 602 216 7200 F 1 602 216 7201
E phxmail@ghd.com
W www.ghd.com

COB PERMITTING APPROVED SEAL
COB ENGINEERING APPROVED SEAL

SUBMITTAL: 3RD SUBMITTAL
FINAL PLANS

AS-BUILT SEAL
DESIGN SEAL
Registered Professional Engineer (Civil)
CERTIFICATE NO. 53839
JORGE GERARDO
3/25/16
Date Signed
ARIZONA, U.S.A.
Expires 9/30/16

COB PLAN TRACKING # ENG-14-00445
COB PLAN TRACKING #
COB PERMIT # ENG-14-00445

ORIGINAL PLAN DATE MAY 2008
LATEST REVISION DATE MARCH 2016
PROJECT NUMBER 84-11109067
SHEET NUMBER 16 of 16

Saved: March 25, 2016 File: 15040-WELL 3-12.dwg Drafter: Dgriffin