CITY OF BUCKEYE
530 East Monroe Avenue
Buckeye, Arizona 85326
623-349-6174

ADDENDUM #1

Issue Date: September 16, 2019

Solicitation: RFP #2019020 – Remove and Replace Two (2) Welded Steel Water Treatment Vessels

Proposal Due Date: September 23, 2019 no later than 9:30 a.m. local time

NOTE: Attach this Addendum to your original Proposal. However, if your Proposal has already been returned, complete this Addendum and return for attachment to your Proposal no later than the time and date mentioned above to:

City of Buckeye
530 East Monroe Avenue
Buckeye, AZ 85326
Attn: Debby Fasano, Contract Administrator

The following change has been made:

1. The bid due date has been changed from September 19, 2019 at 3:00 p.m. to September 23, 2019 no later than 9:30 a.m.

The following questions have been asked:

1. **Q.** Could you provide the drawings/details discussed at the site walk?

   A. See Attachment A.

2. **Q.** Could you provide specifications and/or vendor information on the four types of media contained within the vessels (including any analytical data and previous disposal information)?

   A. Media 1 – PM 80-120 (14,500 LBS.) On previous jobs, the contractor handled the disposal
   Media 2 – PM 250 (5,000 LBS.) On previous jobs, the contractor handled the disposal
   Media 3 – PM 300 (49,000 LBS.) Remove, place in super sack and reinstall
   Media 4 – Anthracite (2,028 LBS.) Remove, place in super sack and reinstall
   Contact Archie with Pureflow for more information/questions about media (Archie MacDonald 562-547-3887)

3. **Q.** Please clarify whether as-built drawings of the new vessels will be required.

   A. As-Built drawings are required.

4. **Q.** Do the new vessels have to have an ASME-coded stamp?

   A. Yes.

5. **Q.** Please clarify which portions of the internal piping will be reused and which portions will be replaced.

   A. The upper and lower headers and laterals will be reused. The nipple, elbow and shower heads on the upper header will be replaced and on the lower header the stainless steel nipple and tee will be replaced (see attached plans).

6. **Q.** Will we need to replace any valves, combination air/vac valves, rupture discs, etc. associated with the existing system?

   A. Reuse existing equipment.

7. **Q.** Please clarify whether this will be cathodic protection or an upgraded grounding system? If we are to install a true cathodic protection system, what type are you looking for on the vessels, and are there any drawings or specifications to follow?

   A. The three (3) filters that have been replaced have quantity 8 (2" Zinc NPS 3000#) anodes per vessel. The City would like the same anodes in order to keep all anodes standard. Life expectancy is a minimum of one (1) year.

8. **Q.** Is there a maximum amount of days/weeks that one vessel can be offline?

   A. One vessel can be offline no longer than eight (8) weeks.

9. **Q.** What is the anticipated schedule to complete the work?

   A. Both vessels are to completed and operational by May 1, 2020

The balance of the specifications and instructions remain the same. Offerors must acknowledge receipt and acceptance of this addendum by returning the entire addendum with the Proposal submittal. Addendums are not included in the page count.

Offeror certified that Offeror has read, understand, and will fully and faithfully comply with this RFP, its attachments and any referenced documents. Offeror also certifies that this offer was independently developed without consultation with any other Offerors or potential Offerors.

Name of Company: _____

Authorized Signature: _____

Print Name and Title: _____

Date: _____

Address: _____

City, State and Zip Code: _____

Telephone Number: _____

Email Address: _____

ATTACHMENT 1

RFP #2019020

THIS DOCUMENT CONTAINS PROPRIETARY INFORMATION WITH ALL RIGHTS & TITLES RESERVED AND MAY NOT BE REPRODUCED IN WHOLE OR IN PART WITHOUT WRITTEN CONSENT OF PUREFLOW FILTRATION DIVISION.

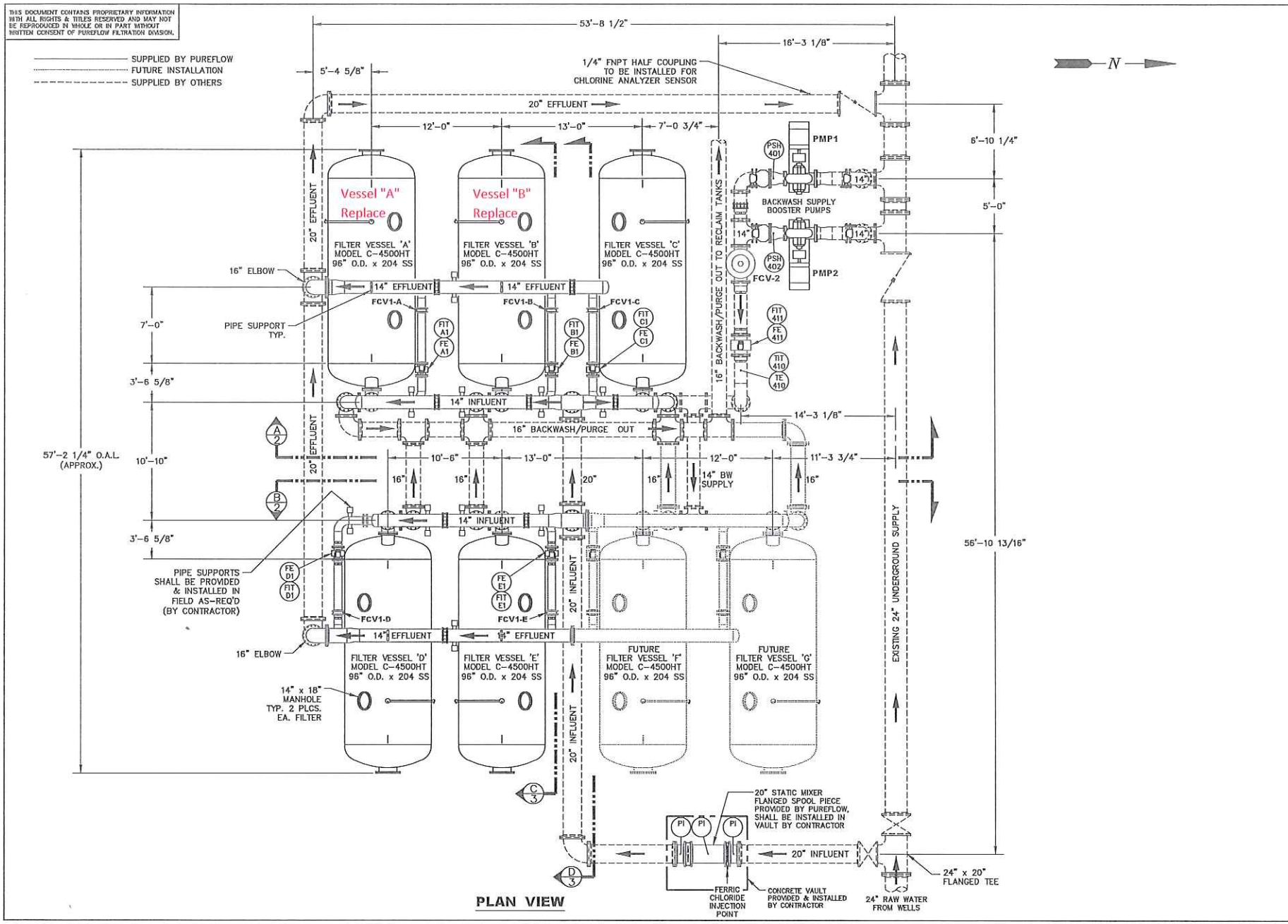

PLAN VIEW

PUREFLOW FILTRATION DIV.
CALIFORNIA ENVIRONMENTAL CONTROLS, INC.
0733 SOUTH WASHINGTON AVENUE
WHITTIER, CALIFORNIA 90605
(800) 925-3425 (562) 945-3425
Fax (562) 693-5257

ENGINEERS
RBF CONSULTING
PHOENIX, AZ

CONTRACTOR
HUNTER CONTRACTING CO.
GILBERT, AZ

REVISIONS

	DESCRIPTION	DATE	APPR
1	PER CUSTOMER	4-28-05	
2	PER CUSTOMER	4-28-05	
3	PER CUSTOMER	7-31-05	

DEVELOPER:
MERITAGE HOMES
SCOTTSDALE, AZ

CLIENT:
TOWN OF BUCKEYE, AZ

PROJECT:
SUNDANCE ARSENIC REMOVAL SYSTEM

TITLE
ARSENIC REMOVAL C-4500HT FILTER SYSTEM LAYOUT

DRAWN BY	R. HOWARD
CHECKED BY	
APPROVED BY	
DATE	04/18/05
DRAWING NO.	G-100
SCALE	NA
JOB NO.	2523
SHEET 1 OF 3	REV. NO. C

THIS DOCUMENT CONTAINS PROPRIETARY INFORMATION WITH ALL RIGHTS & TITLES RESERVED AND MAY NOT BE REPRODUCED IN WHOLE OR IN PART WITHOUT WRITTEN CONSENT OF PUREFLOW FILTRATION DIVISION.

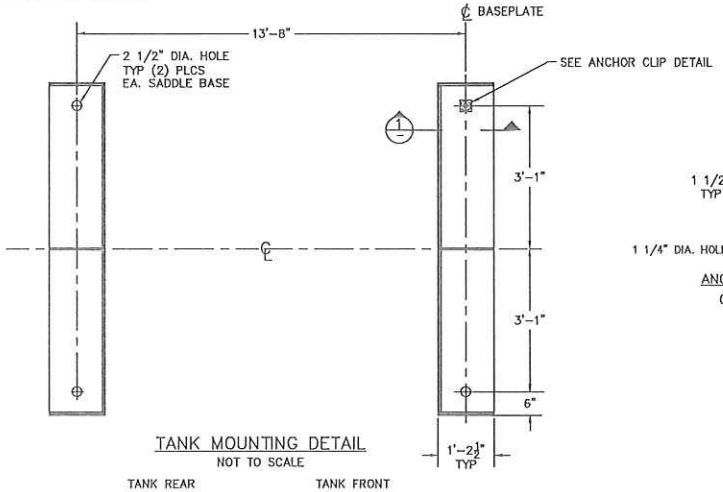

TANK MOUNTING DETAIL
NOT TO SCALE

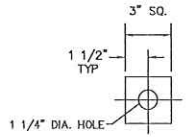

ANCHOR CLIP DETAIL
(4) REQ'D. EA. VESSEL
NTS

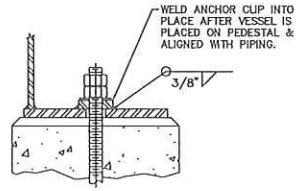

SECTION 1
NTS
VESSEL MOUNTING RECOMMENDATION

MK	SIZE	TYPE	FUNCTION
M1	24"	150# RF	MANWAY
M2	14"x18"	ELIPT.	MANHOLE
E	3"	150# RF	DRAIN
D	2"	150# RF	VENT
C	4"	VIC	MEDIA CLEAN
B	14"	150# RF	EFFLUENT/BACKWASH IN
A	14"	150# RF	INFLUENT/BACKWASH OUT

NOTES:

1. ALL PIPING SHALL BE STANDARD WEIGHT CARBON STEEL. FLANGES ARE 150# R.F.S.O. TYPE.
2. BASIC DESIGN PARAMETERS:
   DESIGNED & CONSTRUCTED IN ACCORDANCE WITH ASME CODE (STAMPED) SEC. V111. DIV. 1.

   SHELL MAT'L:.....C. STEEL
   HEAD MAT'L:.....C. STEEL
   INTERNALS:.....C. STEEL, 316L SS LATERALS

   INTERNAL: COMERCIAL SANDBLAST SSPC-SP6
   ONE COAT OF DEVOE 133 EPOXY, 12-15 MILS DFT

   EXTERNAL: COMMERCIAL BLAST SSPC-SP6
   ONE COAT OF TNEMEC 69 EPOXY, 3-4 MILS DFT
   FINISH COAT IN FIELD BY CONTRACTOR

   VESSEL DESIGN PRESSURE.....75 PSI
   VESSEL TEST PRESSURE.....97.5 PSI
   EFFLUENT FLOW RATE.....1000 GPM
   BACKWASH FLOW RATE.....4,300 GPM
   EMPTY WEIGHT.....15,000 LBS.
   TOTAL OPERATING WEIGHT.....150,000 LBS.
   TOTAL SUPPORT AREA.....2,494 SQ. IN.
   UNIT BEARING PRESSURE.....62 PSI
3. ALL FLANGE BOLT HOLES ARE TO STRADDLE HORIZONTAL AND VERTICAL CENTER LINES.
4. DIMENSIONAL TOLERANCES ±1/4".

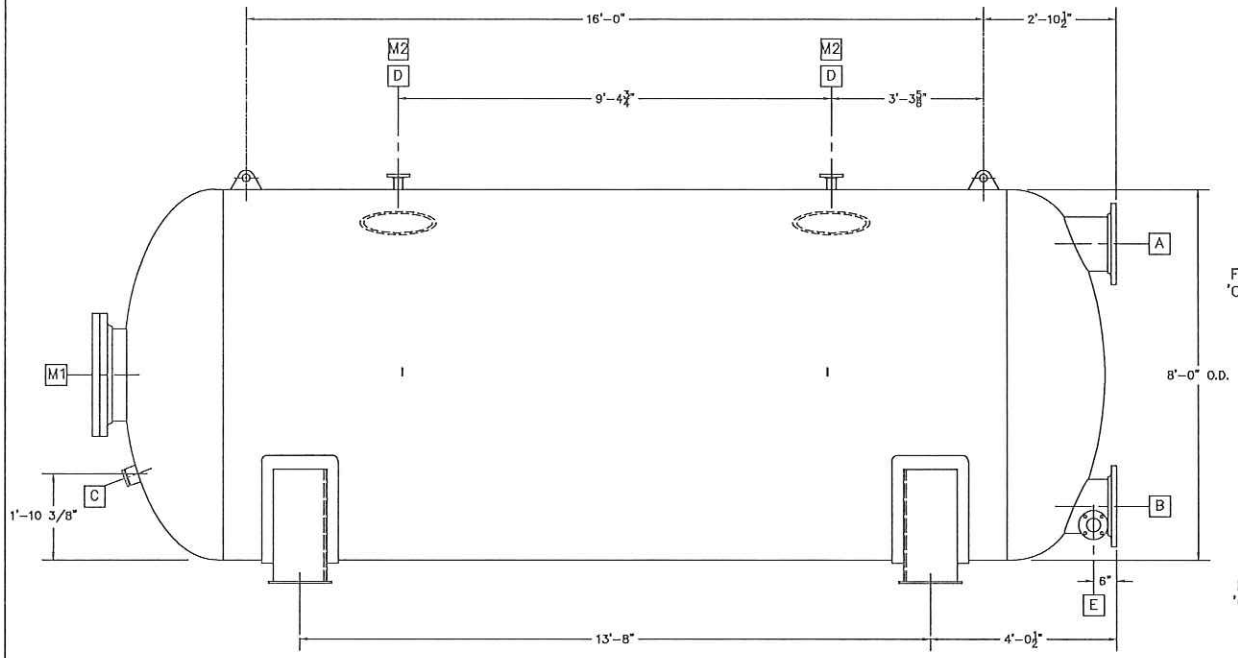

LEFT SIDE ELEVATION

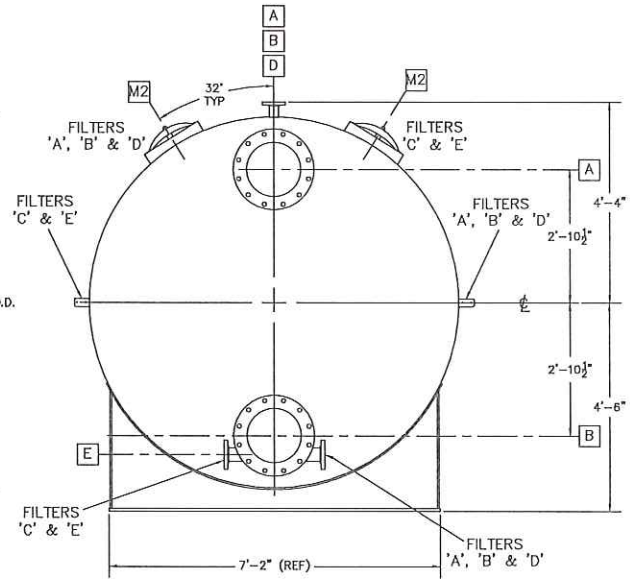

FRONT ELEVATION

Pureflow FILTRATION DIV.
CALIFORNIA ENVIRONMENTAL CONTROLS, INC.
8730 SOUTH WASHINGTON AVENUE
WHITTIER, CALIFORNIA 90606
(800) 926-3425 (562) 945-3425
Fax (562) 693-5257

ENGINEERS
RBF CONSULTING
PHOENIX, AZ

CONTRACTOR
HUNTER CONTRACTING CO.
GILBERT, AZ

REVISIONS

DESCRIPTION	DATE	APPR

DEVELOPER:
MERITAGE HOMES
SCOTTSDALE, AZ

CLIENT:
TOWN OF BUCKEYE, AZ

PROJECT:
SUNDANCE ARSENIC REMOVAL SYSTEM

MODEL C-4500HT FILTER VESSEL

TITLE

DRAWN BY	R. HOWARD
CHECKED BY	
APPROVED BY	
DATE	03/28/05
DRAWING NO.	G-200
SCALE	NONE
JOB NO.	2523
SHEET 1 OF 1	REV. NO. NC

THIS DOCUMENT CONTAINS PROPRIETARY INFORMATION WITH ALL RIGHTS & TITLES RESERVED AND MAY NOT BE REPRODUCED IN WHOLE OR IN PART WITHOUT WRITTEN CONSENT OF PUREFLOW FILTRATION DIVISION.

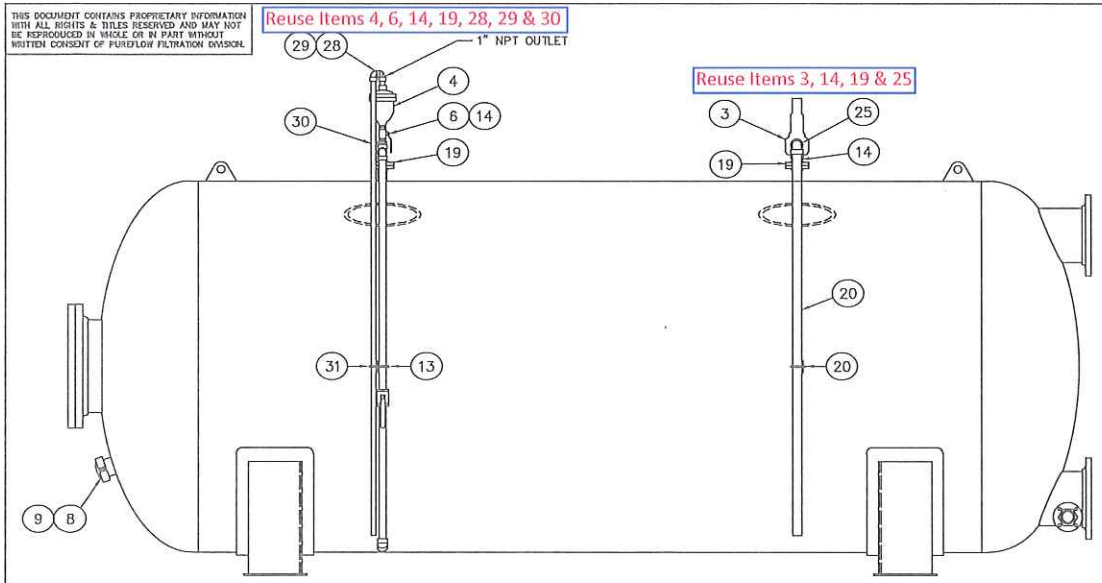

LEFT-SIDE ELEVATION
VESSEL 'A', 'B' & 'D' SHOWN

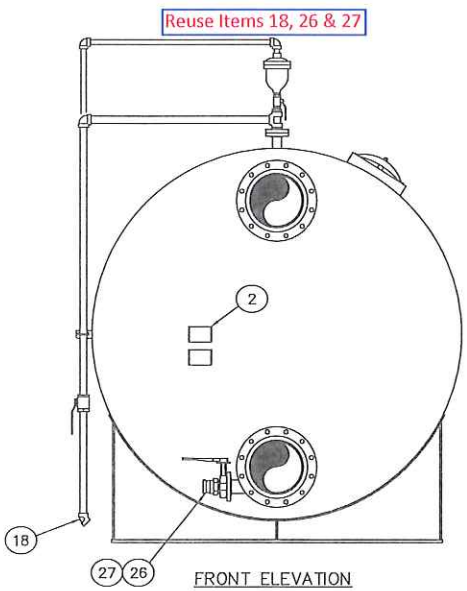

FRONT ELEVATION
VESSEL 'A', 'B' & 'D'

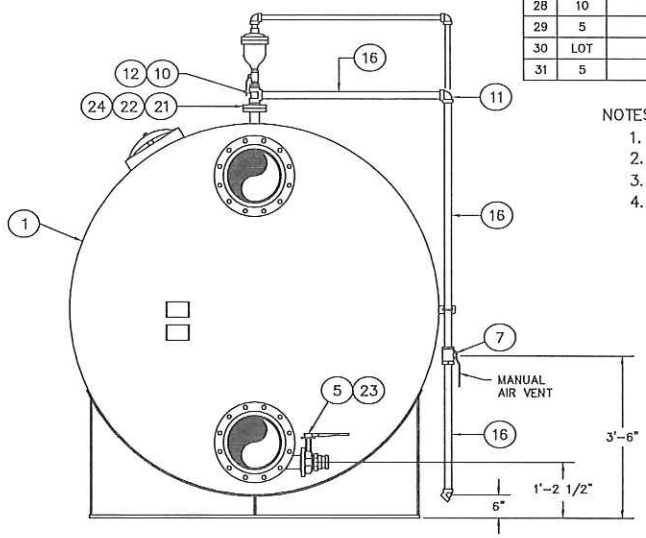

FRONT ELEVATION
VESSEL 'C' & 'E'

BILL OF MATERIALS

ITEM	QTY.	PART NO.	DESCRIPTION	MANUF./MATL SPEC
1	5	G-200	FILTER VESSEL	PUREFLOW
2	LOT	F-103	SYSTEM NAMEPLATES	PUREFLOW
3	5	810-PHGA-W75	THERMAL RELIEF VALVE, 1 1/2" MNPT x 2" NPT SET @ 75 PSIG	SPENCER
4	5	3420AR-038C	AIR RELEASE VALVE, 2" NPT, CAST IRON BODY S.S. TRIM, 1" NPT OUTLET, 3/8" ORIFICE	CLA-VAL
5	5	VF733	BUTTERFLY VALVE, MANUAL, 3" WAFER, CAST IRON LUG BODY 316 S.S. DISC, EPDM SEAT, 316 S.S. STEM WITH HANDLE	VALUE VALVE
6	5	77-108-01	BALL VALVE, 2" NPT, BRONZE BODY AND BALL	APOLLO
7	5	77-107-01	BALL VALVE, 1 1/2" NPT, BRONZE BODY AND BALL	APOLLO
8	5		VICTAULIC COUPLING, 4", EPDM GASKET	
9	5		VICTAULIC CAP, 4", FUSE-COATED	
10	5		TEE, 2" NPT, 150#	304 S.S.
11	5		ELBOW, 90°, 1 1/2" NPT, 150#	304 S.S.
12	5		REDUCING BUSHING, 2" MNPT x 1 1/2" FNPT, 150#	304 S.S.
13	5		U-BOLT, 1 1/2" PIPE, 1/4" ROD W/NUTS	ZINC-PLTD
14	20		CLOSE NIPPLE, 2" SCH. 40	304 S.S.
15	LOT		PIPE, 2" SCH. 40	304 S.S
16	LOT		PIPE, 1 1/2" SCH. 40	304 S.S.
17			DELETED	
18	5		ELBOW, 45°, 1 1/2" NPT, 150#	304 S.S.
19	10		FLANGE, 2", ANSI 150#	304 S.S.
20	5		U-BOLT, 2" PIPE, 1/4" ROD W/NUTS	ZINC-PLTD C. STL
21	10		GASKET, 2", ANSI 150#, 1/8" THK., RING	EPDM-55-65 SHORE
22	40		STUD, 5/8-11 NC x 3 1/4" LG.	ZINC-PLTD C. STL.
23	40		HEX HEAD BOLT, 5/8-11 NC x 1 3/4"	ZINC-PLTD C. STL.
24	80		HEX NUT, 5/8-11 NC	ZINC-PLTD C. STL.
25	5		ELBOW, 90° 2" NPT, 150#	304 S.S.
26	5		FLANGE, 3" NPT, ANSI 125#	CAST IRON
27	5	300-F-BR	CAM-LOCK 3" MNPT x 3" MALE ADAPTER	DIXON / BRONZE
28	10		ELBOW 90°, 1" NPT, 150#	304 S.S.
29	5		NIPPLE, 1" x CLOSE, NPT, SCH. 40	304 S.S.
30	LOT		PIPE, 1" SCH. 40	304 S.S.
31	5		U-BOLT, 1" PIPE, 1/4" ROD W NUTS	ZINC-PLTD C. STL.

NOTES:

1. DIMENSIONAL TOLERANCES ARE ±1/4".
2. ONE END OF ITEM 17 IS TO BE THREADED.
3. ITEM 9 IS TO BE FUSE COATED.
4. SEE DWG. M-100 FOR COMPLETE PIPE ASSEMBLY & TAG NUMBERS.

PUREFLOW FILTRATION DIV.
CALIFORNIA ENVIRONMENTAL CONTROLS, INC.
0739 SOUTH WASHINGTON AVENUE
WHITTIER, CALIFORNIA 90605
(800) 925-3425 (562) 945-3425
Fax (562) 693-5527

ENGINEERS
RBF CONSULTING
PHOENIX, AZ

CONTRACTOR
HUNTER CONTRACTING CO.
GILBERT, AZ

REVISIONS

DESCRIPTION	DATE	APPR

DEVELOPER:
MERITAGE HOMES
SCOTTSDALE, AZ

CLIENT:
TOWN OF BUCKEYE, AZ

PROJECT:
SUNDANCE ARSENIC REMOVAL SYSTEM

TITLE
MODEL C-4500HT FILTER VESSEL ASSEMBLY

DRAWN BY	R. HOWARD
CHECKED BY	
APPROVED BY	
DATE	04/13/05
DRAWING NO.	~~M-200~~
SCALE	NONE
JOB NO.	~~2523~~
SHEET 1 OF 1	REV. NO. ~~NC~~

THIS DOCUMENT CONTAINS PROPRIETARY INFORMATION WITH ALL RIGHTS & TITLES RESERVED AND MAY NOT BE REPRODUCED IN WHOLE OR IN PART WITHOUT WRITTEN CONSENT OF PUREFLOW FILTRATION DIVISION.

MEDIA INFORMATION		APPROX. DEPTH	QTY. LBS. (Kg) PER UNIT	# BAGS PER UNIT
1	PM 80 – 120	9"	14,500	144
2	PM 250	3"	5,000	50
3	PM 300	30"	49,500 (22,500)	18
4	ANTHRACITE	3"	2,028	39

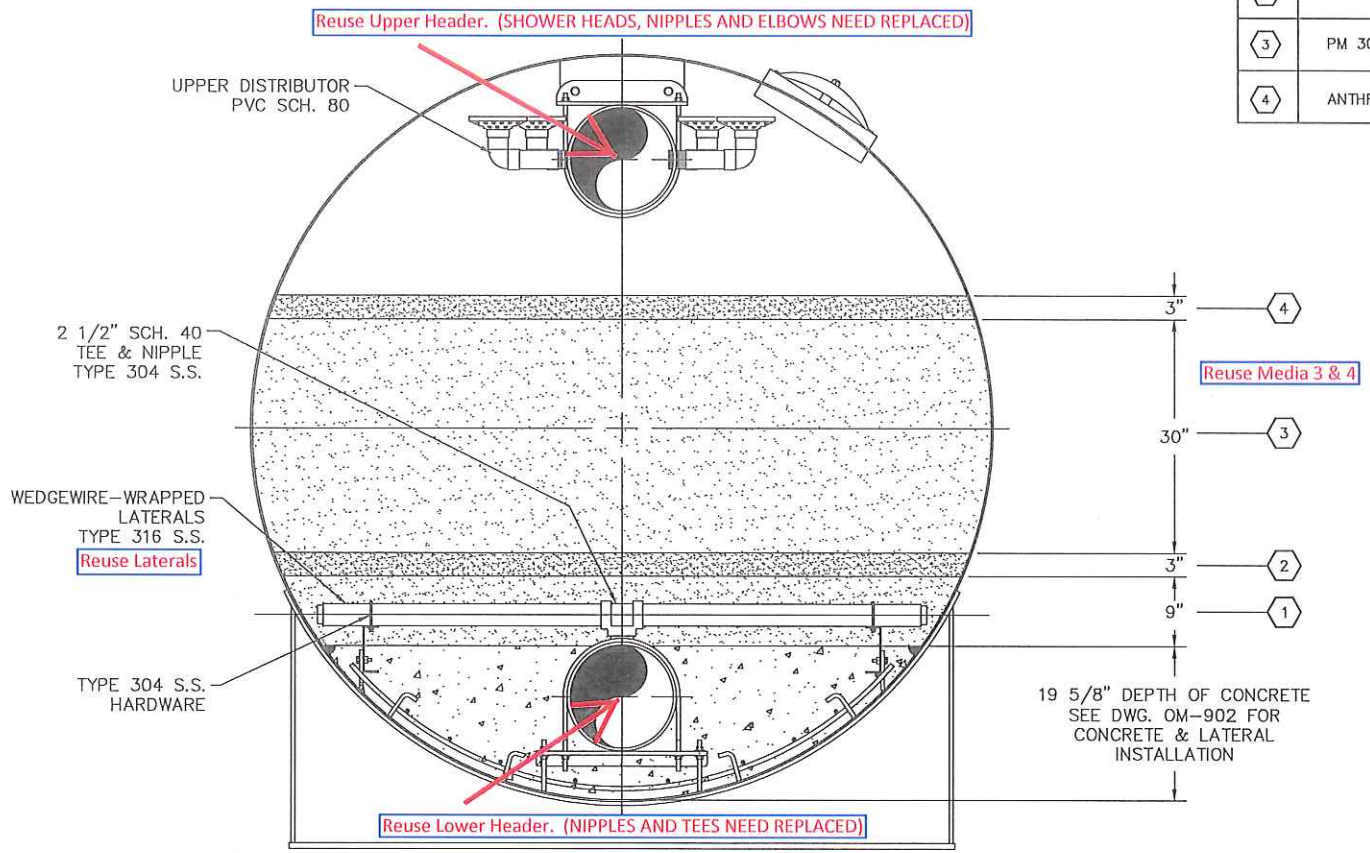

Pureflow FILTRATION DIV.
CALIFORNIA ENVIRONMENTAL CONTROLS, INC.
6739 SOUTH WASHINGTON AVENUE
WHITTIER, CALIFORNIA 90603
(800) 326-3426 (562) 945-3426
Fax (562) 693-5257

ENGINEERS
RBF CONSULTING
PHOENIX, AZ

CONTRACTOR
HUNTER CONTRACTING CO.
GILBERT, AZ

REVISIONS

DESCRIPTION	DATE	APPR
A REVISED PM 300	8/11/05	

DEVELOPER:
MERITAGE HOMES
SCOTTSDALE, AZ

CLIENT:
TOWN OF BUCKEYE, AZ

PROJECT:
SUNDANCE ARSENIC REMOVAL SYSTEM

PROJECT
C–4500HT MEDIA INSTALLATION DETAIL

TITLE

DRAWN BY	R. HOWARD
CHECKED BY	
APPROVED BY	
DATE	04/16/05
DRAWING NO.	OM-901
SCALE	NTS
JOB NO.	2523
SHEET 1 OF 1	REV. NO. A

THIS DOCUMENT CONTAINS PROPRIETARY INFORMATION WITH ALL RIGHTS & TITLES RESERVED AND MAY NOT BE REPRODUCED IN WHOLE OR IN PART WITHOUT WRITTEN CONSENT OF PUREFLOW FILTRATION DIVISION.

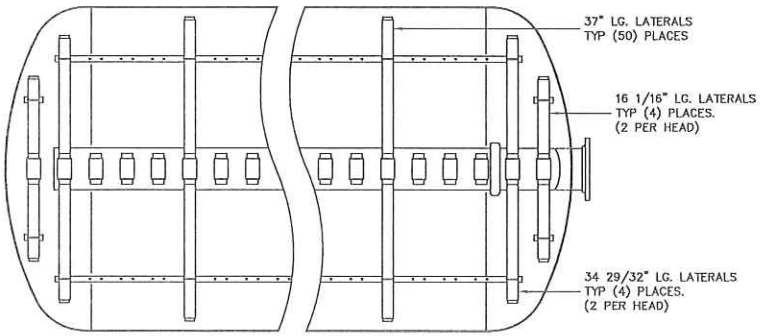

ALIGNMENT DETAIL

FINAL ORIENTATION OF LATERALS MUST BE AS SHOWN HERE

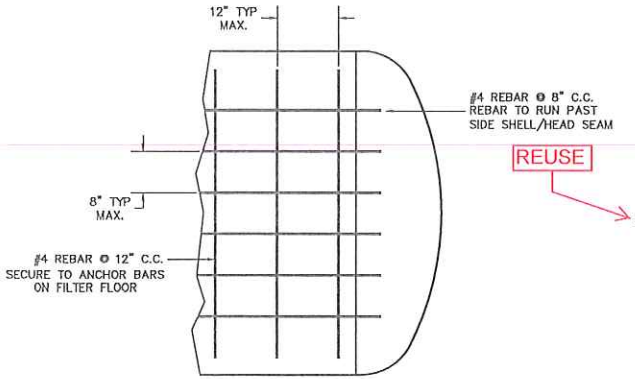

REBAR INSTALLATION

REUSE

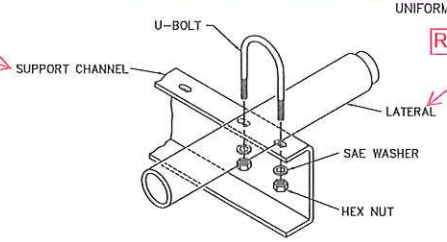

ISOMETRIC VIEW

TYPICAL LATERAL ATTACHMENT

REUSE

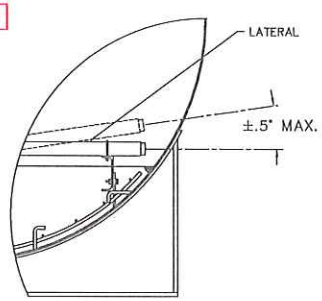

DETAIL 1

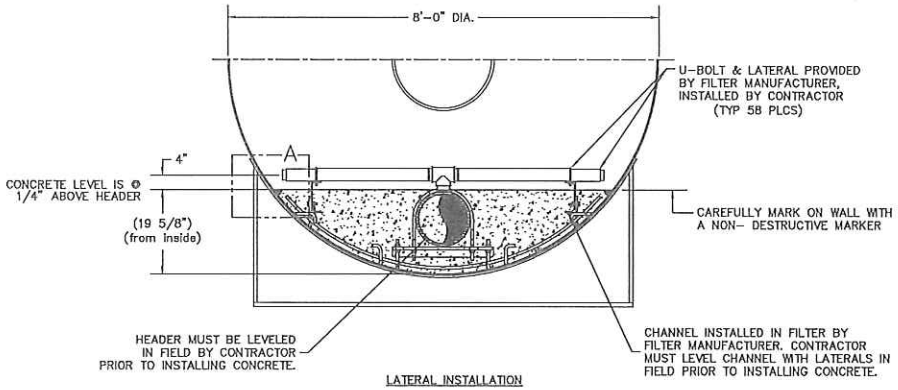

LATERAL INSTALLATION

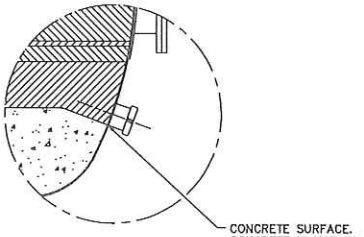

MEDIA DRAIN @ HEAD

LOWER DISTRIBUTOR SPECIAL INSTRUCTIONS

1. SEE LATERALS AND CONCRETE INSTALLATION.
2. LATERALS INSTALLED IN THE VESSEL PRIOR TO SHIPMENT.
3. LATERALS MUST BE REMOVED AND HOLES PLUGGED PRIOR TO POURING CONCRETE. (SEE DWG OM-902)
4. AFTER CONCRETE IS CURED, LATERALS MUST BE RE-INSTALLED WITH SUPPLIED U-BOLTS. (SEE DETAIL THIS SHEET)
5. SEE METHOD OF INSTALLATION IN RECEIVING INSTALLATION AND CONTRACTOR'S RESPONSIBILITY INSTRUCTION.

NOTES PRIOR TO POURING CONCRETE:

1. REMOVE ALL LATERALS EXCEPT THOSE SHOWN IN ALIGNMENT DETAIL BELOW. PLUG ALL TAPPED HOLES PRIOR TO POURING CONCRETE.
2. ALIGN AND LEVEL REMAINING LATERALS WITH HEADER & SUPPORT CHANNELS WITH A TOLERANCE OF NO MORE THAN ± .5 DEG. DEFLECTION. (SEE DETAIL 1 BELOW)
3. HEADER AND SUPPORT CHANNELS MUST BE SECURED TO VESSEL.
4. REMOVE REMAINING LATERALS PRIOR TO POURING CONCRETE.

NOTES FOR CONCRETE INSTALLATION:

1. CONCRETE OF THE SAME QUALITY AS THE SLABS (3000 PSI MIN.) SHOULD BE USED. APPROXIMATELY SIX (4.4) CU. YARDS OF CONCRETE REQUIRED.
2. CONCRETE SHOULD BE MIXED TO PROVIDE A LOW SLUMP POURING CONDITION TO FACILITATE LEVELING.
3. TROWEL CONCRETE SURFACE TO INSURE A LEVEL UNIFORM FINISH.

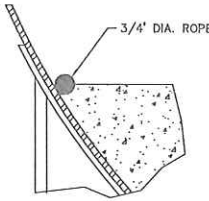

LAY 3/4" DIA. ROPE @ PERIMETER OF VESSEL OF CONCRETE WHILE CONCRETE IS WET.

STEP 1

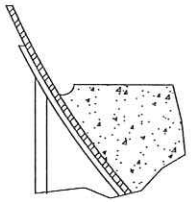

REMOVE ROPE AFTER CONCRETE HAS SET, CLEAN DUST & DEBRIS FROM CHANNEL LEFT BY ROPE. CLEAN VESSEL WALL.

STEP 2

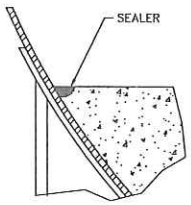

INSTALL SUITABLE FDA OR NSF APPROVED SEALER TO SEAL CONCRETE & VESSEL WALL AROUND PERIMETER. SIKAFLEX-1A IS APPROVED.

STEP 3

DETAIL A

Pureflow FILTRATION DIV.
CALIFORNIA ENVIRONMENTAL CONTROLS, INC.
6733 SOUTH WASHINGTON AVENUE
WHITTIER, CALIFORNIA 90602
(800) 926-3426 (562) 945-3425
Fax (562) 693-5237

RBF CONSULTING
PHOENIX, AZ

CONTRACTOR
HUNTER CONTRACTING CO.
GILBERT, AZ

REVISIONS

DESCRIPTION	DATE	APPR
GENERAL REVISIONS	10/26/05	

DEVELOPER:
MERITAGE HOMES
SCOTTSDALE, AZ

CLIENT:
TOWN OF BUCKEYE, AZ

PROJECT:
SUNDANCE ARSENIC REMOVAL SYSTEM

TITLE
FILTER VESSEL CONCRETE, REBAR AND SEALANT INSTALLATION

DRAWN BY	R. HOWARD
CHECKED BY	
APPROVED BY	
DATE	05/02/05
DRAWING NO.	OM-902
SCALE	NONE
JOB NO.	2523
SHEET 1 OF1	REV. NO. A